PRELIMINARY
NOT FOR CONSTRUCTION

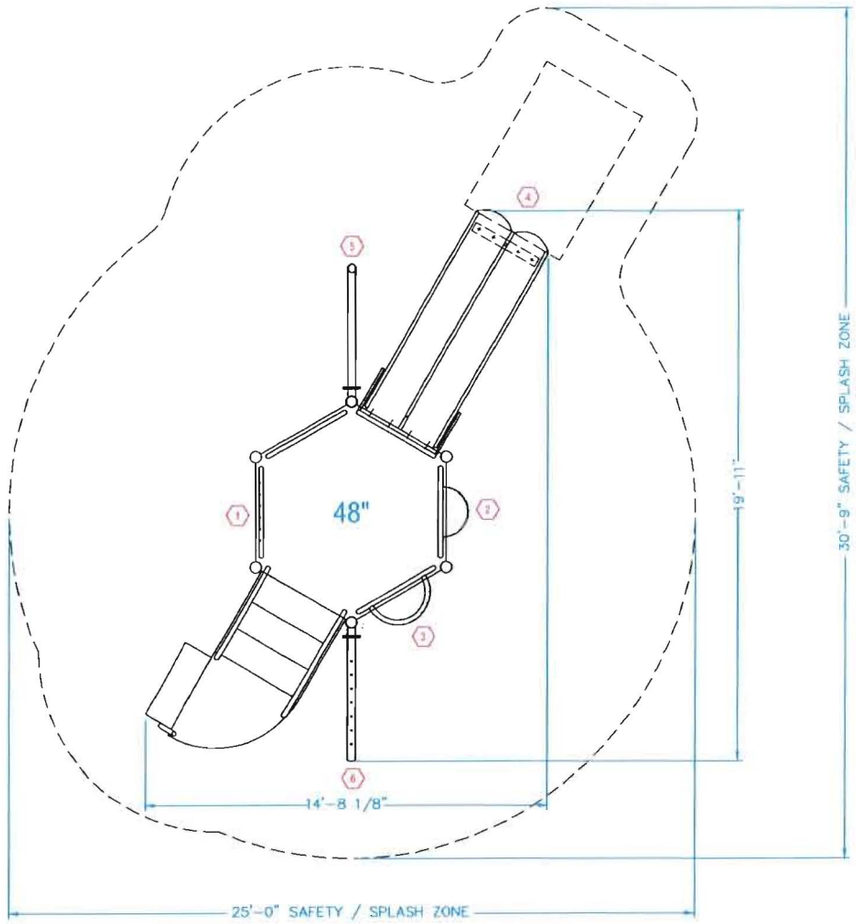

PRODUCTS LIST

TAG	DESCRIPTION
1	ARCH JETS
2	BUBBLE WINDOW
3	RAINBOW ARCH
4	4' DUAL WAVE SLIDE
5	ARM, PIPE FALLS
6	ARM, BAR JETS

FLOW RATE: 175 GPM
TDH = 25'

STRUCTURE HEIGHT
APPROX: 10'-0"

STRUCTURE AREA
APPROX: 40 SQ.FT.

SPLASH ZONE AREA
APPROX: 587 SQ.FT.

WHITEWATER
WhiteWater West Industries Ltd
8700 Ledlow Way, Richmond, B.C. Canada V6W 1J7
Tel (604) 273-1988 Fax (604) 273-6518

HYDROSTRUCTURE
HS100

01

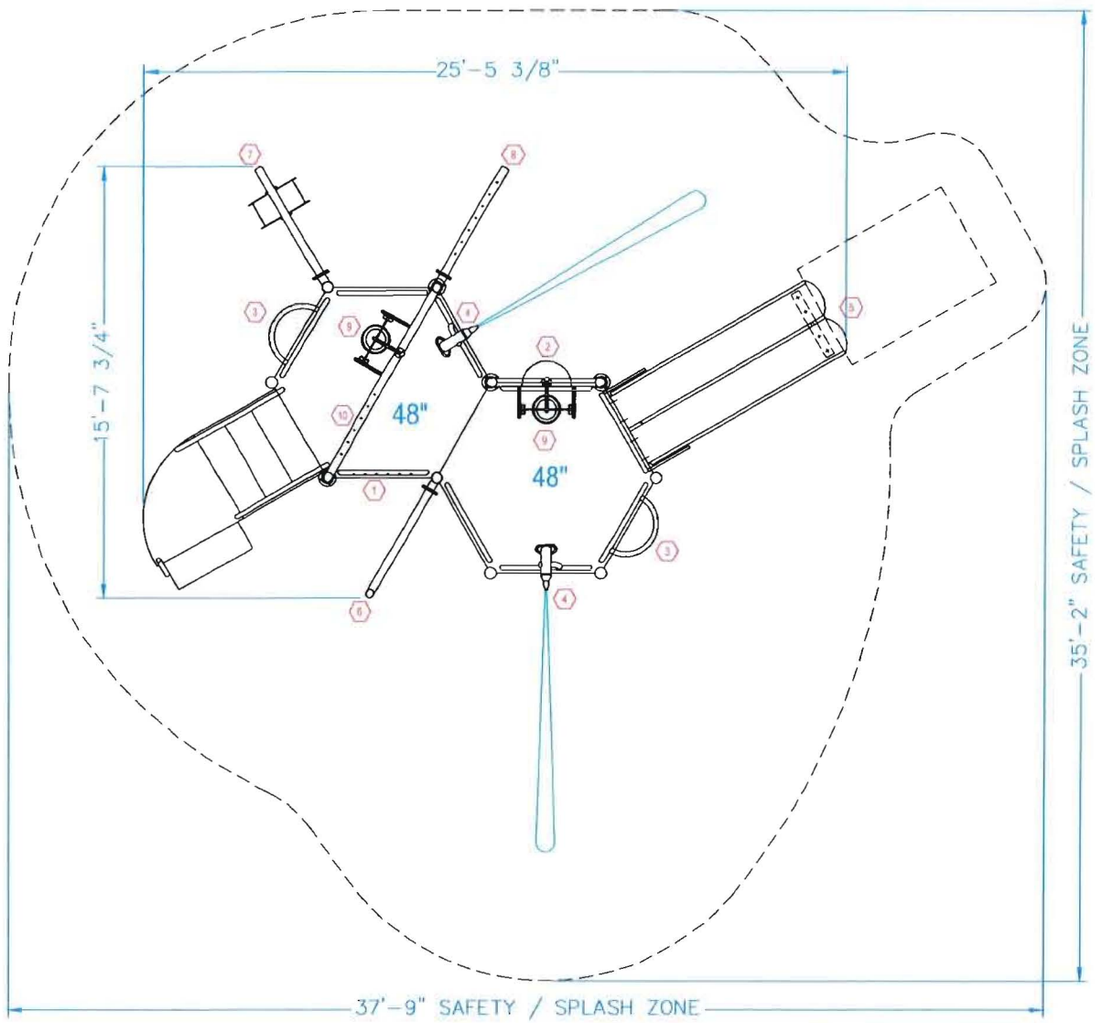

PRELIMINARY
NOT FOR CONSTRUCTION

PRODUCTS LIST

TAG	DESCRIPTION
1	ARCH JETS
2	BUBBLE WINDOW
3	RAINBOW ARCH (QTY. 2)
4	BLASTER (QTY. 2)
5	4' DUAL WAVE SLIDE
6	ARM, PIPE FALLS
7	ARM, WATER WHEEL
8	ARM, BAR JETS
9	OVERHEAD TIPPING BUCKET (QTY. 2)
10	OVERHEAD DOWN JETS

STRUCTURE HEIGHT
APPROX: 13'-2"

STRUCTURE AREA
APPROX: 80 SQ.FT.

SPLASH ZONE AREA
APPROX: 927 SQ.FT.

WHITEWATER

WhiteWater West Industries Ltd
6700 McMillan Way, Richmond, B.C. Canada V6W 1J7
Tel (604) 273-1008 Fax (604) 273-4518

HYDROSTRUCTURE
HS200

01

PRELIMINARY
NOT FOR CONSTRUCTION

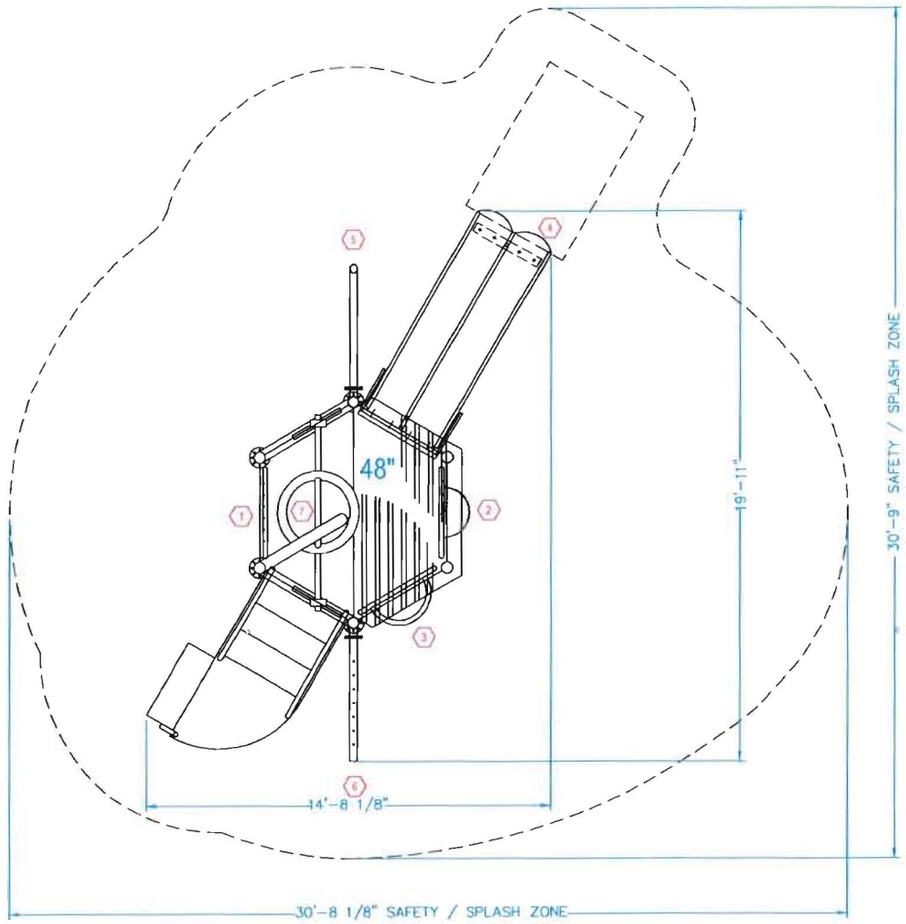

PRODUCTS LIST

TAG	DESCRIPTION
1	ARCH JETS
2	BUBBLE WINDOW
3	RAINBOW ARCH
4	4' DUAL WAVE SLIDE
5	ARM, PIPE FALLS
6	ARM, BAR JETS
7	3' TIPPING BUCKET

STRUCTURE HEIGHT
APPROX: 18'-0"

STRUCTURE AREA
APPROX: 40 SQ.FT.

SPLASH ZONE AREA
APPROX: 686 SQ.FT.

WHITE WATER

WhiteWater West Industries Ltd
8700 McMillan Way, Richmond, B.C. Canada V6W 1J7
Tel (604) 273 1058 Fax (604) 273-4548

HYDROSTRUCTURE
HS100WB

01