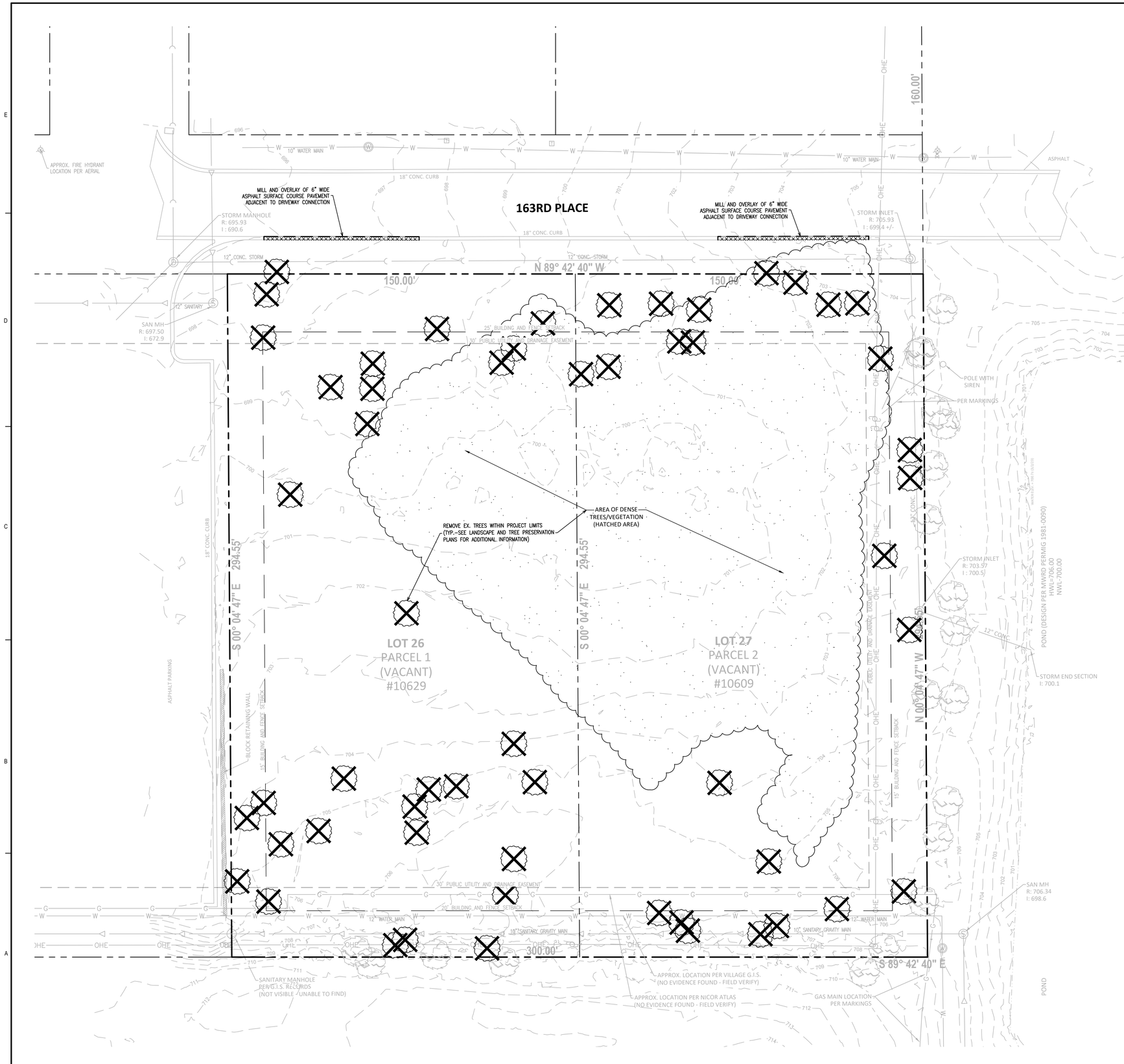

DEMOLITION HATCH LEGEND:

⊗ EXISTING TREE TO BE REMOVED

DEMOLITION NOTES:

1. CONTRACTOR SHALL CONTACT J.U.L.I.E (1–800–892–0123 OR 811) AND/OR PRIVATE LOCATING SERVICE TO LOCATE ALL UNDERGROUND UTILITY LINES PRIOR TO STARTING ANY DEMOLITION AND/OR EXCAVATION. EXACT LOCATIONS OF ANY EXISTING ELECTRIC, GAS, TELEPHONE, ETC. LINES ARE UNKNOWN.
2. CONTRACTOR SHALL PERFORM ALL DEMOLITION WORK IN ACCORDANCE WITH ALL APPLICABLE FEDERAL, STATE, AND LOCAL REQUIREMENTS.
3. CONTRACTOR SHALL OBTAIN ALL NECESSARY DEMOLITION PERMITS AND COORDINATE ALL DEMOLITION WORK WITH THE MUNICIPALITY AND OWNERS REPRESENTATIVE.
4. ALL EROSION AND SEDIMENTATION CONTROL MEASURES AND DEVICES SHALL BE INSTALLED AND FUNCTIONAL BEFORE THE SITE IS OTHERWISE DISTURBED. THEY SHALL BE KEPT OPERATIONAL AND CONTINUOUSLY MAINTAINED THROUGHOUT ALL CONSTRUCTION UNTIL PERMANENT SITE STABILIZATION HAS BEEN ACHIEVED (SEE EROSION CONTROL AND STORMWATER POLLUTION PREVENTION PLANS FOR ADDITIONAL INFORMATION AND DETAILS).
5. THE PURPOSE OF THIS DRAWING IS TO CONVEY THE OVERALL SCOPE OF DEMOLITION WORK AND IT IS NOT INTENDED TO COVER ALL DETAILS OR SPECIFICATIONS REQUIRED TO COMPLY WITH GENERALLY ACCEPTED DEMOLITION PRACTICES. CONTRACTOR SHALL THOROUGHLY FAMILIARIZE HIMSELF WITH THE SITE SCOPE OF WORK, AND ALL EXISTING CONDITIONS AT THE JOB SITE PRIOR TO BIDDING AND COMMENCING THE WORK. THE DEMOLITION CONTRACTOR SHALL BE SOLELY RESPONSIBLE FOR MEANS, METHODS, TECHNIQUES, OR PROCEDURES USED TO COMPLETE THE WORK IN ACCORDANCE WITH THE CONSTRUCTION DOCUMENTS AND IS LIABLE FOR THE SAFETY OF THE PUBLIC AND CONTRACTOR'S EMPLOYEES DURING THE COURSE OF THE PROJECT.
6. THE DEMOLITION PLAN IS INTENDED TO SHOW REMOVAL OF KNOWN SITE FEATURE AND UTILITIES AS SHOWN ON THE SURVEY PROVIDED TO THE ENGINEER FOR DESIGN. THERE MAY BE OTHER SITE FEATURES, UTILITIES, STRUCTURES, AND MISCELLANEOUS ITEMS BOTH BURIED AND ABOVE GROUND THAT ARE WITHIN THE LIMITS OF WORK THAT MAY REQUIRE REMOVAL FOR THE PROPOSED SITE IMPROVEMENTS BUT THAT ARE NOT SHOWN HEREON. THE CONTRACTOR IS RESPONSIBLE FOR THE REMOVAL OF SUCH ITEMS.
7. CONTRACTOR SHALL CONTACT THE RESPECTIVE UTILITY COMPANIES PRIOR TO COMMENCING ANY SITE DEMOLITION OPERATIONS TO COORDINATE ANY DISCONNECTION OR REMOVAL OF EXISTING UTILITIES WITHIN THE PROPOSED AREA OF WORK.
8. CONTRACTOR SHALL COORDINATE ANY SHUT DOWNS OF EXISTING ROADWAYS AND UTILITIES WITH THE NECESSARY GOVERNING AUTHORITIES.
9. ALL EXISTING BUILDINGS, FOUNDATIONS, CONCRETE OR ASPHALT PAVEMENT OR WALKS, CURB AND GUTTER AND MISCELLANEOUS STRUCTURES (INCLUDING, BUT NOT LIMITED TO FENCES, POLES, YARD LIGHTS, ELECTRICAL PANELS, WHEEL STOPS AND MISCELLANEOUS DEBRIS) NOTED TO BE REMOVED SHALL BE DEMOLISHED, REMOVED FROM THE SITE AND LEGALLY DISPOSED OF BY THE CONTRACTOR.
10. VOIDS LEFT BY ANY ITEM REMOVED UNDER ANY PROPOSED BUILDINGS, PAVEMENTS, OR WALKS OR WITHIN 24" THEREOF SHALL BE BACKFILLED IN ACCORDANCE WITH THE PROJECT SPECIFICATIONS AND GEOTECHNICAL REPORT.
11. AS SOON AS DEMOLITION WORK HAS BEEN COMPLETED, FINAL GRADE OF BACKFILL IN DEMOLITION AREAS SHALL BE COMPACTED PER THE GEOTECHNICAL REPORT TO PRESENT A NEAT, WELL DRAINED APPEARANCE, AND TO PREVENT WATER FROM DRAINING UNNECESSARILY ONTO ADJACENT PROPERTIES. CONTRACTOR SHALL PROVIDE TEMPORARY DIVERSION SWALES OR OTHER MEANS OF MAINTAINING ADEQUATE SITE DRAINAGE.
12. ALL EXISTING TREES SHOWN ARE TO REMAIN UNLESS OTHERWISE NOTED. CONTRACTOR SHALL COORDINATE ALL TREE REMOVALS WITH LANDSCAPE PLANS.
13. CONTRACTOR SHALL UTILIZE CARE WHEN WORKING NEAR EXISTING UTILITIES TO REMAIN. ANY DAMAGE TO EXISTING UTILITIES NOT NOTED TO BE REMOVED SHALL BE REPAIRED AT CONTRACTOR'S EXPENSE AND TO THE SATISFACTION OF THE OWNER AND/OR ENGINEER.
14. CONTRACTOR SHALL REPAIR AT HIS EXPENSE ANY DAMAGE TO EXISTING ASPHALT, CONCRETE, CURBS, SIDEWALKS, ETC. RESULTING FROM CONSTRUCTION TRAFFIC AND/OR OPERATIONS. REPAIRS SHALL BE MADE TO THE SATISFACTION OF THE OWNER AND/OR ENGINEER.
15. ALL FIRE ACCESS LANES WITHIN THE PROJECT AREA SHALL REMAIN IN SERVICE, CLEAN OF DEBRIS, AND ACCESSIBLE FOR USE BY EMERGENCY VEHICLES.
16. ALL EXISTING SANITARY SEWERS, STORM SEWERS, WATER MAINS OR IRRIGATION LINES AND APPURTENANCES NOTED FOR REMOVAL WITHIN THE AREA OF THE PROPOSED CONSTRUCTION SHALL BE REMOVED FROM THE SITE AND DISPOSED OF BY THE CONTRACTOR OR ABANDONED IN PLACE. UNLESS OTHERWISE NOTED ON PLANS, ALL ABANDONED SEWER LINES SHALL BE PLUGGED AT BOTH ENDS WITH A MINIMUM OF TWO (2) FOOT LONG NON–SHRINK CONCRETE OR MORTAR PLUGS.
17. SEE GENERAL NOTES AND SPECIFICATIONS SHEET FOR ADDITIONAL INFORMATION AND REQUIREMENTS.

VILLAGE OF ORLAND PARK ILLINOIS

Village of Orland Park Illinois

POLICE DEPARTMENT FIRING RANGE AND EOC FACILITY

10609 163rd St. Orland Park, IL 60467

JACOB & HEFNER ASSOCIATES
1333 Butterfield Rd, Suite 300, Downers Grove, IL 60515
PHONE: (630) 652-4600, FAX: (630) 652-4601
www.jacobandhefner.com

PLANNING DIVISION APPROVED

Case No: 2023-0508
Date: 12/19/2023
W/Conditions: Yes
W/Out Conditions:

VILLAGE OF ORLAND PARK

ISSUE
ISSUED FOR REVIEW - 90%

REV	DATE	DESCRIPTION
3	01/16/24	ISSUED FOR REVIEW - 90%
2	12/01/23	ISSUED FOR REVIEW - 60%
1	10/18/23	ISSUED FOR REVIEW - 30%

KEY PLAN

N

GRAPHIC SCALE 1"= 20'
0 10' 20' 40'
1" = 20'

PROJECT NO.	H064
DESIGNED BY	--
DRAWN BY	--
CHECKED BY	--
APPROVED BY	--

SHEET TITLE

EXISTING CONDITIONS AND DEMOLITION PLAN

DATE: 01/16/24
REV. 3
SHEET NO. C2

Copyright © 2024 Jacob & Hefner Associates, INC.

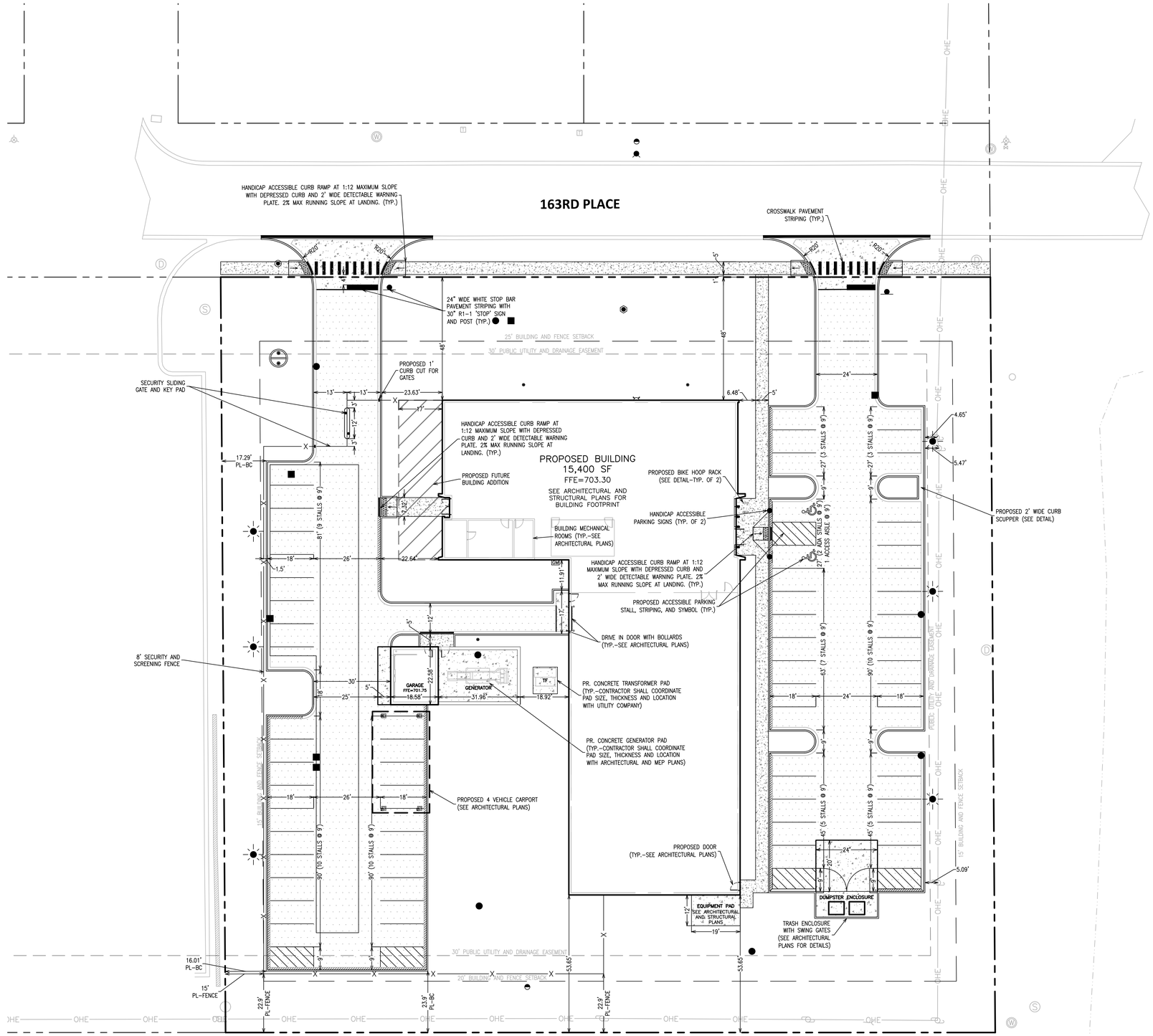

PAVEMENT HATCH LEGEND:

ASPHALT PAVEMENT
2" HMA SURFACE COURSE, MIX D, N50
2-1/2" HMA BINDER COURSE, IL 19.0, N50
8" CA-6 CRUSHED STONE
COMPACTED SUBGRADE, 95% MODIFIED PROCTOR

HEAVY DUTY CONCRETE PAVEMENT
8" PORTLAND CEMENT CONCRETE
4,000 PSI, A/E
4" CA-6 CRUSHED STONE
COMPACTED SUBGRADE, 95% MODIFIED PROCTOR

CONCRETE SIDEWALK
5" PORTLAND CEMENT CONCRETE
4,000 PSI, A/E
4" CA-6 CRUSHED STONE
COMPACTED SUBGRADE, 95% MODIFIED PROCTOR

CURB LEGEND:

B6.12 CURB AND GUTTER

REVERSE PITCH B6.12 CURB AND GUTTER

DEPRESSED CURB AND GUTTER

NOTE:

REFER TO THE PROJECT GEOTECHNICAL ENGINEERING REPORT PREPARED BY TESTING SERVICE CORPORATION DATED APRIL 7, 2023 FOR INFORMATION REGARDING THE EXISTING SOIL CONDITIONS AND PROPOSED SUBGRADE PREPARATION REQUIREMENTS.

GEOMETRIC NOTES:

1. ALL DIMENSIONS ARE MEASURED FROM FACE OF CURB OR CENTER OF PAVEMENT MARKING UNLESS OTHERWISE NOTED.
2. ALL CURB RADII ARE 4.5' UNLESS OTHERWISE NOTED.
3. CONTRACTOR SHALL COORDINATE ALL SITE IMPROVEMENTS WITH ARCHITECTURAL PLANS.
4. ALL PROPOSED PAVEMENT MARKINGS SHALL BE 4" UNLESS OTHERWISE NOTED. PAVEMENT MARKINGS SHALL CONFORM TO ARTICLE 1095.02 OF THE I.D.O.T. STANDARD SPECIFICATIONS.
5. CONSTRUCTION SURVEY AND STAKEOUT SHALL BE THE RESPONSIBILITY OF THE CONTRACTOR.
6. BUILDING DIMENSIONS AND DOORWAY LOCATIONS ARE SHOWN FOR REFERENCE ONLY. REFER TO ARCHITECTURAL AND STRUCTURAL PLANS FOR ADDITIONAL INFORMATION AND DETAILS.
7. CONTRACTOR SHALL REPAIR AT HIS EXPENSE ANY DAMAGE TO EXISTING ASPHALT, CONCRETE, CURBS, SIDEWALKS, ETC. RESULTING FROM CONSTRUCTION TRAFFIC AND/OR OPERATIONS. REPAIRS SHALL BE MADE TO THE SATISFACTION OF THE OWNER AND/OR ENGINEER.
8. ALL EXISTING TREES SHOWN ARE TO REMAIN UNLESS OTHERWISE NOTED. SEE LANDSCAPE PLANS FOR PROPOSED TREE AND PLANTING REQUIREMENTS.
9. SEE GENERAL NOTES AND SPECIFICATIONS SHEET FOR ADDITIONAL INFORMATION AND REQUIREMENTS.

VILLAGE OF ORLAND PARK ILLINOIS

Village of Orland Park Illinois

POLICE DEPARTMENT FIRING RANGE AND EOC FACILITY

10609 163rd St. Orland Park, IL 60467

JACOB & HEFNER ASSOCIATES
1333 Butterfield Rd, Suite 300, Downers Grove, IL 60515
PHONE: (630) 652-4600, FAX: (630) 652-4601
www.jacobandhefner.com

PLANNING DIVISION APPROVED

Case No: 2023-0508
Date: 12/19/2023
W/Conditions: Yes
W/Out Conditions:

VILLAGE OF ORLAND PARK

ISSUE
ISSUED FOR REVIEW - 90%

REV	DATE	DESCRIPTION
3	01/16/24	ISSUED FOR REVIEW - 90%
2	12/01/23	ISSUED FOR REVIEW - 60%
1	10/18/23	ISSUED FOR REVIEW - 30%

KEY PLAN

N

GRAPHIC SCALE 1"= 20'
0 10' 20' 40'
1" = 20'

PROJECT NO.	H064
DESIGNED BY	--
DRAWN BY	--
CHECKED BY	--
APPROVED BY	--

SHEET TITLE
DIMENSIONAL CONTROL AND PAVING PLAN

DATE: 01/16/24
REV. 3
SHEET NO. C3

Copyright © 2024 Jacob & Hefner Associates, INC.

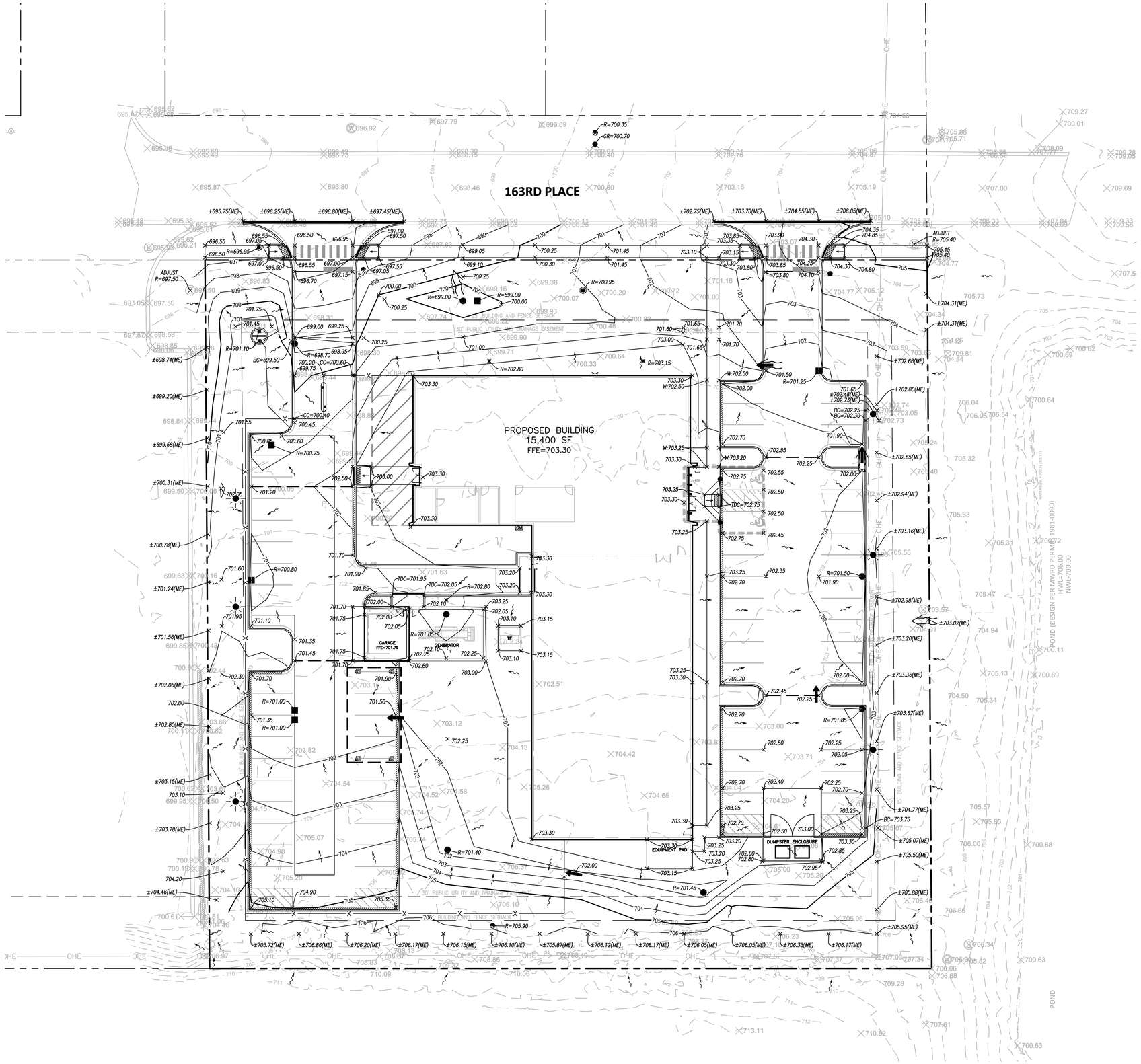

GRADING LEGEND:

EXISTING CONTOUR	600
EXISTING SPOT ELEVATION	× XXX.XX
PROPOSED CONTOUR	600
PROPOSED SPOT ELEVATION	× XXX.XX
PROPOSED GROUND/FINISHED GRADE ELEVATION	× G:XXX.XX
PROPOSED TOP OF SIDEWALK ELEVATION	× W:XXX.XX
PROPOSED BACK OF CURB ELEVATION	× BC=XXX.XX
PROPOSED TOP OF DEPRESSED CURB	× TDC=XXX.XX
PROPOSED CURB CUT ELEVATION	× CC=XXX.XX
PROPOSED EDGE OF PAVEMENT ELEVATION	× EP=XXX.XX
PROPOSED RIM ELEVATION	× R=XXX.XX
PROPOSED ADJUSTED RIM ELEVATION	× ADJUST R=XXX.XX
PROPOSED GRADE RING ELEVATION	× GR=XXX.XX
MATCH EXISTING ELEVATION	× ±XXX.XX(ME)
PROPOSED DRAINAGE DIVIDE	
DRAINAGE DIRECTION	
OVERFLOW ROUTE	
OFF-SITE OVERFLOW ROUTE	

GRADING NOTES:

1. ALL PROPOSED SPOT ELEVATIONS ARE TOP OF PAVEMENT OR FINISHED GRADE ELEVATIONS UNLESS OTHERWISE NOTED.
2. CONTRACTOR SHALL INSTALL ALL EROSION AND SEDIMENT CONTROL MEASURES PRIOR TO COMMENCEMENT OF SITE GRADING OPERATIONS.
3. ALL PROPOSED GRADING, PAVEMENT, APRONS, CURBS, SIDEWALKS, ETC. SHALL MATCH EXISTING GRADES FLUSH.
4. MAXIMUM CROSS SLOPES AND LONGITUDINAL SLOPES FOR ALL CONCRETE SIDEWALKS AND HANDICAP ACCESSIBLE ROUTES SHALL NOT EXCEED 2% AND 5%, RESPECTIVELY.
5. MAXIMUM SLOPES WITHIN THE HANDICAP ACCESSIBLE PARKING AREAS AND ACCESSIBLE ROUTE TO THE BUILDING SHALL NOT EXCEED 2% IN ANY DIRECTION. HANDICAP ACCESSIBLE ROUTE DENOTED BY:
6. MAXIMUM GRADE DIFFERENCE BETWEEN PAVEMENT SURFACES AND ADJACENT CONCRETE SIDEWALKS FOR THE HANDICAP ACCESSIBLE ROUTE TO THE BUILDING SHALL NOT EXCEED 1/4" VERTICAL OR 1/2" WHEN BEVELED.
7. CONTRACTOR SHALL COORDINATE EXTERIOR DOORWAY AND FINISHE GRADE ELEVATIONS WITH ARCHITECTURAL AND STRUUCTURAL PLANS. ALL HANDICAP ACCESSIBLE DOORWAY LOCATIONS REQUIRE AND EXTERIOR LANDING THAT IS A MINIMUM OF FIVE (5') FEET IN LENGTH WITH A SLOPE NOT EXCEEDING 2% IN ANY DIRECTION.
8. CONTRACTOR SHALL UTILIZE CARE WHEN WORKING NEAR EXISTING UTILITIES TO REMAIN. ANY DAMAGE TO EXISTING UTILITIES SHALL BE REPAIRED AT THE CONTRACTOR'S EXPENSE AND TO THE SATISFACTION OF THE OWNER AND/OR ENGINEER.
9. CONTRACTOR SHALL CONTINUOUSLY MAINTAIN ALL EXISTING STORM SEWERS WITHIN THE PROJECT AREA DURING CONSTRUCTION OPERATIONS AS NECESSARY TO PREVENT SILT OR DEBRIS ACCUMULATION.
10. ALL GREEN AREAS SHALL BE DRESSED WITH A MINIMUM OF 6" OF TOPSOIL AND PERMANENT SEEDING.
11. SEE GENERAL NOTES AND SPECIFICATIONS SHEET FOR ADDITIONAL INFORMATION AND REQUIREMENTS.

VILLAGE OF ORLAND PARK ILLINOIS

Village of Orland Park Illinois

POLICE DEPARTMENT FIRING RANGE AND EOC FACILITY

10609 163rd St. Orland Park, IL 60467

JACOB & HEFNER ASSOCIATES
1333 Butterfield Rd, Suite 300, Downers Grove, IL 60515
PHONE: (630) 652-4600, FAX: (630) 652-4601
www.jacobandhefner.com

PLANNING DIVISION APPROVED

Case No: 2023-0508
Date: 12/19/2023
W/Conditions: Yes
W/Out Conditions:

VILLAGE OF ORLAND PARK

ISSUE
ISSUED FOR REVIEW - 90%

REV	DATE	DESCRIPTION
3	01/16/24	ISSUED FOR REVIEW - 90%
2	12/01/23	ISSUED FOR REVIEW - 60%
1	10/18/23	ISSUED FOR REVIEW - 30%

KEY PLAN

N

GRAPHIC SCALE 1"= 20'
0 10' 20' 40'
1" = 20'

PROJECT NO.	H064
DESIGNED BY	--
DRAWN BY	--
CHECKED BY	--
APPROVED BY	--

SHEET TITLE
GRADING PLAN

DATE: 01/16/24
REV. 3
SHEET NO. C4

Copyright © 2024 Jacob & Hefner Associates, INC.

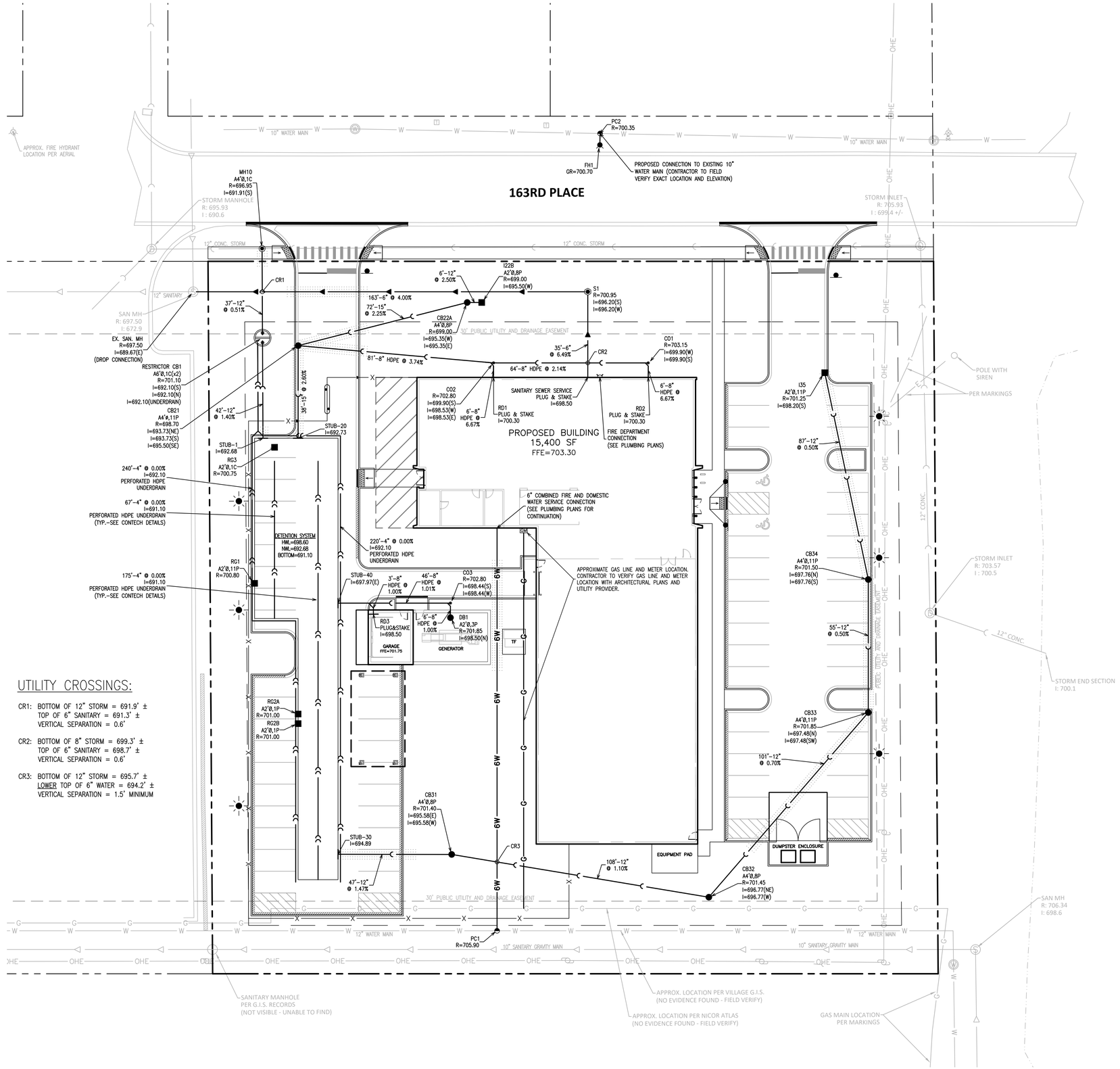

UTILITY CROSSINGS:

CR1: BOTTOM OF 12" STORM = 691.9' ±
TOP OF 6" SANITARY = 691.3' ±
VERTICAL SEPARATION = 0.6'

CR2: BOTTOM OF 8" STORM = 699.3' ±
TOP OF 6" SANITARY = 698.7' ±
VERTICAL SEPARATION = 0.6'

CR3: BOTTOM OF 12" STORM = 695.7' ±
LOWER TOP OF 6" WATER = 694.2' ±
VERTICAL SEPARATION = 1.5' MINIMUM

UTILITY NOTES:

1. ALL UTILITY LENGTHS SHOWN ARE MEASURED FROM CENTER OF STRUCTURES IN LINEAR FEET.
2. ALL EXISTING UTILITY RIMS, GRADE RINGS, PEDESTALS, ETC. SHALL BE RAISED OR LOWERED AS REQUIRED TO MEET PROPOSED FINISHED GRADE.
3. ALL PROPOSED CONNECTIONS TO EXISTING UTILITY STRUCTURES OR PIPING SHALL BE CONSTRUCTED IN ACCORDANCE WITH THE APPLICABLE GOVERNING AUTHORITY REQUIREMENTS AND SPECIFICATIONS.
4. GRANULAR TRENCH BACKFILL MATERIAL, IDOT GRADATION CA-7, SHALL BE PLACED AND COMPACTED TO A MINIMUM OF 95% MODIFIED PROCTOR DENSITY, PER ASTM D1557, OVER ALL UTILITIES WHICH ARE CONSTRUCTED UNDER, OR WITHIN TWO (2) FEET OF, ANY PROPOSED OR EXISTING PAVEMENT, PARKING LOTS, SIDEWALKS, ETC. GRANULAR TRENCH BACKFILL NOTED ON THE PLANS BY:
5. CONTRACTOR IS SPECIFICALLY CAUTIONED THAT THE LOCATION AND/OR ELEVATION OF EXISTING UTILITIES AS SHOWN ON THESE PLANS IS BASED ON RECORDS OF THE VARIOUS UTILITY COMPANIES AND, WHERE POSSIBLE, MEASUREMENTS TAKEN IN THE FIELD. THE INFORMATION IS NOT TO BE RELIED ON AS BEING EXACT OR COMPLETE. CONTRACTOR MUST CALL THE LOCAL UTILITY LOCATION CENTER AT LEAST FORTY-EIGHT (48) HOURS BEFORE ANY EXCAVATION TO REQUEST EXACT FIELD LOCATIONS OF THE UTILITIES. IT SHALL BE THE RESPONSIBILITY OF THE CONTRACTOR TO RELOCATE ALL EXISTING UTILITIES WHICH CONFLICT WITH THE PROPOSED SITE IMPROVEMENTS SHOWN ON THE PLANS.
6. CONTRACTOR SHALL UTILIZE CARE WHEN WORKING NEAR EXISTING UTILITIES TO REMAIN. ANY DAMAGE TO EXISTING UTILITIES NOT NOTED TO BE REMOVED SHALL BE REPAIRED AT THE CONTRACTOR'S EXPENSE AND TO THE SATISFACTION OF THE OWNER AND/OR ENGINEER.
7. CONTRACTOR SHALL EXCAVATE AND FIELD VERIFY ALL EXISTING UTILITY LOCATIONS, SIZES, CONDITIONS AND ELEVATIONS AT PROPOSED POINTS OF CONNECTION PRIOR TO COMMENCING ANY UNDERGROUND CONSTRUCTION. CONTRACTOR SHALL NOTIFY THE OWNER AND ENGINEER OF ANY DISCREPANCIES OR CONFLICTS PRIOR TO PROCEEDING WITH CONSTRUCTION.
8. CONTRACTOR SHALL CONTINUOUSLY MAINTAIN ALL EXISTING SEWER SYSTEMS DURING CONSTRUCTION OPERATIONS AS NECESSARY TO PREVENT SILT OR DEBRIS ACCUMULATION.
9. SEE GENERAL NOTES AND SPECIFICATIONS SHEET FOR ADDITIONAL INFORMATION AND REQUIREMENTS INCLUDING ALL PIPE MATERIAL AND JOINT SPECIFICATIONS.

WATER MAIN NOTES:

WATER MAIN STRUCTURE SYMBOL LEGEND:
VV = VALVE VAULT
PC = PRESSURE CONNECTION
FH = FIRE HYDRANT ASSEMBLY

1. ALL WATER MAIN SHALL BE DIP CLASS 52, UNLESS OTHERWISE NOTED ON THE PLANS.
2. ALL FIRE HYDRANT LEADS SHALL BE 6-INCH, CLASS 52 DIP UNLESS OTHERWISE NOTED ON THE PLANS.
3. BRASS WEDGES FOR LOCATING WATER MAINS SHALL BE INSTALLED PER SECTION 41-2.05C OF THE STANDARD SPECIFICATIONS FOR WATER AND SEWER CONSTRUCTION IN ILLINOIS, AS AMENDED.
4. MAINTAIN A MINIMUM OF 5.5-FT OF COVER AS MEASURED FROM THE PROPOSED GRADE OVER THE WATER MAIN. MAINTAIN HORIZONTAL SEPARATION WITH OTHER UTILITIES PER IEPA REQUIREMENTS.

SANITARY SEWER NOTES

SANITARY STRUCTURE SYMBOL LEGEND:
S = SANITARY MANHOLE

ALL SANITARY MANHOLES SHALL HAVE THE FOLLOWING FRAME AND LID:
1C: IDOT TYPE 1 (CLOSED), EJIW 1050Z1

1. ALL SANITARY SEWER SHALL BE PVC SDR 26 UNLESS OTHERWISE NOTED ON THE PLANS.

STORM SEWER NOTES:

STORM SEWER STRUCTURE SYMBOL LEGEND:
I = INLET
CB = CATCH BASIN
RD = ROOF DRAIN
CO = CLEAN OUT

STORM SEWER FRAME AND GRATE/LID SYMBOL LEGEND:
1C: IDOT TYPE 1 (CLOSED), EJIW 1050Z1
8P: IDOT TYPE 8, EJIW 6527 ("BEEHIVE GRATE")
11P: IDOT TYPE 11, EJIW 7210 (TYPE M2 GRATE)
3V: IDOT TYPE 3V, EJIW 7221V (TYPE M4 VANE GRATE AND T1 BACK)

EXAMPLE:
MH3
A4Ø,1P
MANHOLE #3, TYPE A, 4' DIAMETER, IDOT TYPE 1 FRAME AND GRATE (OPEN)

1. ALL 12" AND 15" STORM SEWER SHALL BE REINFORCED CONCRETE CULVERT PIPE (RCP) CLASS V. ALL OTHER STORM SEWER SHALL BE RCP CLASS IV ASTM C 76, WITH "O" RING RUBBER GASKET JOINTS CONFORMING TO ASTM C-443, UNLESS OTHERWISE NOTED ON THE PLANS.
2. ALL STORM SEWER UNDERDRAIN PIPE SHALL BE PERFORATED ADS N-12 OR APPROVED EQUAL UNLESS OTHERWISE NOTED
3. ALL STORM SEWER CASTINGS SHALL BE EMBOSSED WITH A FISH IMAGE AND "DUMP NO WASTE – DRAINS TO WATERWAYS"

VILLAGE OF ORLAND PARK ILLINOIS

Village of Orland Park Illinois

POLICE DEPARTMENT FIRING RANGE AND EOC FACILITY

10609 163rd St. Orland Park, IL 60467

JACOB & HEFNER ASSOCIATES
1333 Butterfield Rd, Suite 300, Downers Grove, IL 60515
PHONE: (630) 652-4600, FAX: (630) 652-4601
www.jacobandhefner.com

PLANNING DIVISION APPROVED
Case No: 2023-0508
Date: 12/19/2023
W/Conditions: Yes
W/Out Conditions:

VILLAGE OF ORLAND PARK

ISSUE
ISSUED FOR REVIEW - 90%

REV	DATE	DESCRIPTION
3	01/16/24	ISSUED FOR REVIEW - 90%
2	12/01/23	ISSUED FOR REVIEW - 60%
1	10/18/23	ISSUED FOR REVIEW - 30%

KEY PLAN

N

GRAPHIC SCALE 1"= 20'
0 10' 20' 40'
1" = 20'

PROJECT NO.	H064
DESIGNED BY	--
DRAWN BY	--
CHECKED BY	--
APPROVED BY	--

SHEET TITLE
UTILITY PLAN

DATE: 01/16/24
REV. 3
SHEET NO. C5

Copyright © 2024 Jacob & Hefner Associates, INC.

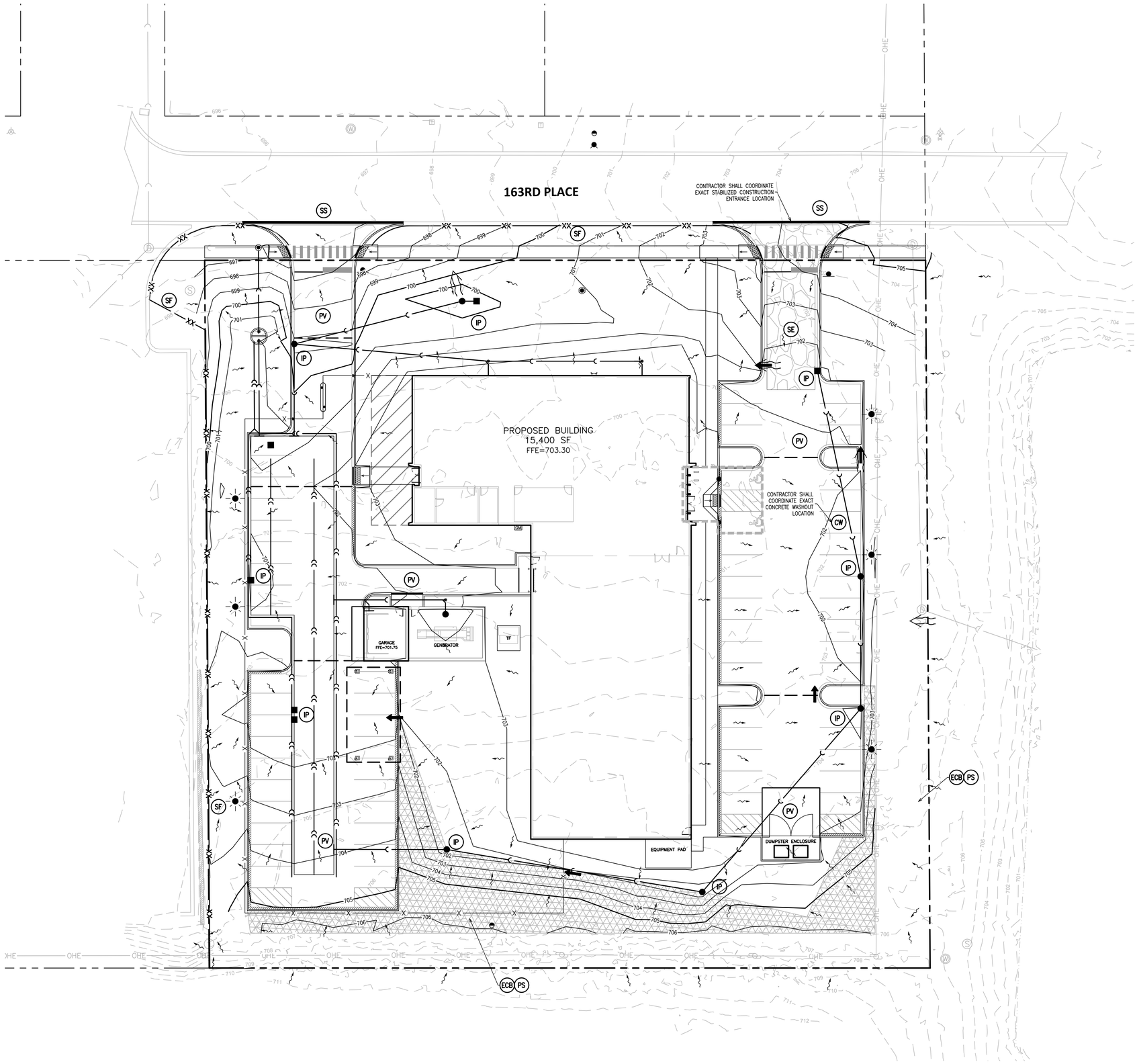

EROSION CONTROL LEGEND:

- IP — INLET PROTECTION
- SF — SILT FENCE
- SE — STABILIZED CONSTRUCTION ENTRANCE
- CW — CONCRETE WASHOUT
- ECB — EROSION CONTROL BLANKET (NORTH AMERICAN GREEN S75)
- PS — PERMANENT SEEDING (SEE LANDSCAPE PLANS FOR ADDITIONAL INFORMATION AND DETAILS)
- PV — PAVEMENT
- SS — STREET SWEEPING

EROSION CONTROL NOTES:

1. ALL EROSION AND SEDIMENT CONTROL MEASURES SHALL BE IN PLACE PRIOR TO COMMENCEMENT OF SITE GRADING OR DEMOLITION OPERATIONS.
2. CONTRACTOR SHALL IMPLEMENT APPROPRIATE DUST CONTROL MEASURES AS NECESSARY.
3. EROSION CONTROL MEASURES INDICATED ON THE PLANS ARE THE MINIMUM REQUIREMENTS ANTICIPATED BY THE ENGINEER. ADDITIONAL MEASURES MAY BE REQUIRED DURING CONSTRUCTION AS WARRANTED BY SITE CONDITIONS OR AS DIRECTED BY THE ENGINEER AND/OR PROJECT GOVERNING AUTHORITIES.
4. SEE GENERAL NOTES AND SPECIFICATIONS SHEETS AND STORMWATER POLLUTION PREVENTION PLANS FOR ADDITIONAL INFORMATION AND REQUIREMENTS.

SWPPP CONSTRUCTION SCHEDULE:

1. OBTAIN ALL APPLICABLE SITE PERMITS AND THOROUGHLY REVIEW PROJECT'S STORMWATER POLLUTION PREVENTION PLAN (SWPPP) AND EROSION CONTROL PLANS PRIOR TO COMMENCEMENT OF CONSTRUCTION OPERATIONS. CONTRACTOR SHALL BE RESPONSIBLE FOR MAINTAINING AND UPDATING THE SWPPP THROUGHOUT THE DURATION OF CONSTRUCTION AS NECESSARY UNTIL FINAL SITE STABILIZATION IS ACHIEVED.
2. INSTALL PERIMETER SEDIMENT CONTROL MEASURES (I.E. SILT FENCE AND STABILIZED CONSTRUCTION ENTRANCE).
3. INSTALL INLET PROTECTION DEVICES FOR EXISTING STORM SEWER INLETS AND DRAINAGE STRUCTURES.
4. PERFORM STORMWATER POLLUTION PREVENTION SITE INSPECTIONS ON A WEEKLY BASIS AND WITHIN TWENTY–FOUR (24) HOURS OF THE END OF A RAINFALL EVENT THAT IS 0.5 INCH OR GREATER (OR EQUIVALENT SNOWFALL). AT A MINIMUM, THE INSPECTIONS SHALL INCLUDE THE DISTURBED AREAS OF THE CONSTRUCTION SITE THAT HAVE NOT BEEN FINALLY STABILIZED, ALL STRUCTURAL CONTROL MEASURES, LOCATIONS WHERE VEHICLES ENTER OR EXIST THE SITE, AND ANY ADDITIONAL BEST MANAGEMENT PRACTICES IDENTIFIED IN THE SWPPP.
   - 4.1. ALL SITE EROSION AND SEDIMENT CONTROL MEASURES AND BEST MANAGEMENT PRACTICES SHALL BE THE RESPONSIBILITY OF THE GENERAL CONTRACTOR AND SHALL BE CONTINUOUSLY MAINTAINED THROUGHOUT THE DURATION OF CONSTRUCTION. CONTRACTOR SHALL MAKE AND COMPLETE THE REQUIRED REPAIRS WITHIN FORTY–EIGHT (48) HOURS OF THE INSPECTION.
   - 4.2. CONTRACTOR IS RESPONSIBLE FOR INSTALLATION OF ANY ADDITIONAL STRUCTURAL CONTROL MEASURES NECESSARY TO PREVENT EROSION AND SEDIMENTATION AS DETERMINED BY THE SITE INSPECTIONS.
   - 4.3. COPIES OF THE WEEKLY INSPECTION REPORT SHALL BE SUBMITTED TO THE PUBLIC WORKS SUPERINTENDENT AND THE VILLAGE ENGINEER.
5. BEGIN SITE CLEARING AND GRADING OPERATIONS.
6. PROVIDE TEMPORARY SEEDING AND/OR MULCHING FOR ALL DISTURBED SITE AREAS THAT WILL NOT BE WORKED ON FOR MORE THAN SEVEN (7) DAYS.
7. INSTALL NEW STORM SEWERS AND OTHER SITE UTILITIES AS INDICATED ON THE PLANS.
8. INSTALL TEMPORARY CONCRETE WASHOUT PRIOR TO COMMENCEMENT OF ANY CONCRETE WORK ON SITE.
9. BEGIN SITE PAVING OPERATIONS (I.E. DRIVES, PARKING LOTS, ETC.)
10. PERFORM STREET CLEANING OPERATIONS AND OTHER BEST MANAGEMENT PRACTICES AS NEEDED FOR AREAS ADJACENT TO THE PROJECT SITE.
11. INSTALL BUILDING FOUNDATIONS AND COMPLETE BUILDING CONSTRUCTION AND REMAINING SITE IMPROVEMENTS INDICATED ON THE PLANS.
12. PERFORM FINAL GRADING OPERATIONS AND ESTABLISH PERMANENT VEGETATIVE COVER IN ALL LANDSCAPED AREAS.
13. REMOVE ALL TEMPORARY SITE EROSION AND SEDIMENT CONTROL MEASURES WITHIN THIRTY (30) DAYS OF FINAL SITE STABILIZATION.

VILLAGE OF ORLAND PARK ILLINOIS

Village of Orland Park Illinois

POLICE DEPARTMENT FIRING RANGE AND EOC FACILITY

10609 163rd St. Orland Park, IL 60467

JACOB & HEFNER ASSOCIATES
1333 Butterfield Rd, Suite 300, Downers Grove, IL 60515
PHONE: (630) 652-4600, FAX: (630) 652-4601
www.jacobandhefner.com

PLANNING DIVISION APPROVED

Case No: 2023-0508
Date: 12/19/2023
W/Conditions: Yes
W/Out Conditions:

VILLAGE OF ORLAND PARK

ISSUE
ISSUED FOR REVIEW - 90%

REV	DATE	DESCRIPTION
3	01/16/24	ISSUED FOR REVIEW - 90%
2	12/01/23	ISSUED FOR REVIEW - 60%
1	10/18/23	ISSUED FOR REVIEW - 30%

KEY PLAN

N

GRAPHIC SCALE 1"= 20'
0 10' 20' 40'
1" = 20'

PROJECT NO.	H064
DESIGNED BY	--
DRAWN BY	--
CHECKED BY	--
APPROVED BY	--

SHEET TITLE
EROSION CONTROL PLAN

DATE: 01/16/24
REV. 3
SHEET NO. C6

Copyright © 2024 Jacob & Hefner Associates, INC.

CONTROL MEASURE GROUP	CONTROL MEASURE	APPLICABLE	SYMBOL	CONTROL MEASURE CHARACTERISTICS	TEMPORARY	PERMANENT	REQUIRED MAINTENANCE
VEGETATIVE SOIL COVER	TEMPORARY SEEDING		TS	PROVIDES QUICK TEMPORARY COVER TO CONTROL EROSION WHEN PERMANENT SEEDING IS NOT DESIRED OR TIME OF YEAR IS INAPPROPRIATE	X		RESEED ANY FAILING AREAS
	PERMANENT SEEDING	X	PS	PROVIDES PERMANENT VEGETATIVE COVER TO CONTROL EROSION AND FILTERS SEDIMENT FROM WATER. MAY BE PART OF FINAL LANDSCAPE PLAN		X	RESEED ANY FAILING AREAS
	DORMANT SEEDING		DS	SAME AS PERMANENT SEEDING EXCEPT IS DONE DURING DORMANT SEASON. HIGHER RATES OF SEED APPLICATION ARE REQUIRED	X	X	RESEED AS NEEDED
	SODDING		SO	QUICK PERMANENT VEGETATIVE COVER USED TO CONTROL EROSION AND ESTABLISH VEGETATIVE FILTER STRIP, CAN BE USED ON STEEP SLOPES OR IN DRAINAGE WAYS OR OTHER AREAS WHERE SEEDING MAY BE DIFFICULT	X	X	N/A
NON VEGETATIVE SOIL COVER	MACHINE TRACKING		GC	PROVIDES SOIL ROUGHING TO PREVENT EROSION		X	N/A
	POLYMER		P	USED AS ADDED INSURANCE IN CONJUNCTION WITH TEMPORARY OR PERMANENT SEEDING. PROVIDES TEMPORARY COVER WHERE VEGETATION CANNOT BE ESTABLISHED	X	X	REAPPLY EVERY 1-1/2 MONTHS
	AGGREGATE COVER		AG	PROVIDES SOIL COVER ON ROADS, PARKING LOTS AND OTHER AREAS WHERE VEGETATION CANNOT BE ESTABLISHED. PREVENTS MUD FROM BEING PICKED UP AND CARRIED OFF-SITE	X	X	CLEAN DIRT AND SEDIMENT FROM STONE AS NEEDED
	PAVING	X	PV	PROVIDES PERMANENT COVER ON ROADS, PARKING LOTS AND OTHER AREAS WHERE VEGETATION CANNOT BE ESTABLISHED		X	N/A
DIVERSIONS	RIDGE DIVERSION		RD	TYPICALLY USED ABOVE SLOPES TO COLLECT RUNOFF AND TRANSFER DOWNSTREAM	X	X	CLEAN OUT SILT WHEN HALF FULL
	CHANNEL DIVERSION		CD	TYPICALLY USED TO DIVERT RUNOFF TO PREVENT EROSION	X	X	REPLACE PROTECTION AS NEEDED
	COMBINATION DIVERSION		DC	TYPICALLY USED ANYWHERE ON A SLOPE. SOIL TAKEN OUT OF A CHANNEL IS USED TO BUILD THE RIDGE	X	X	REPLACE PROTECTION AS NEEDED
	CURB AND GUTTER		CG	SPECIAL CASE OF DIVERSION USED IN CONJUNCTION WITH A ROAD TO DIVERT RUNOFF FROM AN AREA NEEDING EROSION PROTECTION		X	N/A
	BENCHES		B	SPECIAL CASE OF DIVERSION CONSTRUCTED WHEN WORKING ON CUT SLOPES TO SHORTEN LENGTH OF SLOPE AND PROVIDE SLOPE STABILITY	X	X	N/A
WATERWAYS	VEGETATIVE CHANNEL		VC	PROVIDES ADDITIONAL STABILITY TO CHANNEL AND USED WITH RELATIVELY LOW FLOW VELOCITIES	X	X	REDO ANY FAILING AREAS
	LINED CHANNEL		LC	USED WHEN VEGETATION IS INADEQUATE TO PROTECT A CHANNEL FROM HIGH FLOW VELOCITIES OR WHERE VEGETATION CANNOT BE ESTABLISHED	X	X	REPLACE PROTECTION AS NEEDED
ENCLOSED DRAINAGE	STORM SEWER	X	STM	CAN BE USED TO CONVEY SEDIMENT LADEN RUNOFF TO SEDIMENT BASIN OR IN CONJUNCTION WITH A WATERWAY	X	X	CLEAN OUT SEDIMENT AS NEEDED
	UNDER DRAIN		UD	USED TO LOWER WATER TABLE AND INTERCEPT GROUNDWATER FOR BETTER VEGETATION GROWTH AND SLOPE STABILITY. USED TO CARRY BASE FLOW IN WATERWAYS AND TO DEWATER SEDIMENT BASINS.	X	X	N/A
SPILLWAYS	STRAIGHT PIPE SPILLWAY		SPS	USED FOR RELATIVELY SMALL VERTICAL DROPS AND SMALL FLOWS OF WATER		X	CLEAN OUT CONSTRUCTION DEBRIS AS NEEDED
	DROP INLET PIPE SPILLWAY		DIS	SAME AS PIPE SPILLWAY EXCEPT LARGER FLOWS AND LARGE VERTICAL DROPS CAN BE ACCOMMODATED		X	CLEAN OUT CONSTRUCTION DEBRIS AS NEEDED
	WEIR SPILLWAY		W	USED FOR RELATIVELY SMALL VERTICAL DROPS AND FLOWS IN EXCESS OF THE STORM SEWER SYSTEM	X	X	CLEAN OUT CONSTRUCTION DEBRIS AS NEEDED
	BOX INLET WEIR SPILLWAY		BS	SAME AS WEIR SPILLWAY EXCEPT LARGER FLOWS CAN BE ACCOMMODATED DUE TO LOWER WEIR LENGTH	X	X	CLEAN OUT CONSTRUCTION DEBRIS AS NEEDED
OUTLETS	LINED APRON	X	LA	PROTECTS DOWNSTREAM CHANNEL FROM HIGH VELOCITY OF FLOW DISCHARGING FROM FLARED END SECTIONS OR OTHER OUTLET STRUCTURES	X	X	REPAIR DISLODGED STONES AND EROSION UNDER RIP-RAP AS NEEDED
SEDIMENT BASINS	SEDIMENT BASIN		SB	USED TO COLLECT SMALLER PARTICLES AND TO DETAIN WATER WITH A CONTROLLED RELEASE	X	X	CLEAN OUT SEDIMENT WHEN HALF FULL
	SEDIMENT TRAP		ST	USED TO COLLECT LARGER PARTICLES AND TO DETAIN WATER WITH A CONTROLLED RELEASE	X	X	CLEAN OUT SEDIMENT WHEN HALF FULL
SEDIMENT FILTERS	SILT FENCE	X	SF	USED TO FILTER SEDIMENT FROM RUNOFF	X		CLEAN OUT SEDIMENT WHEN HALF FULL AND REPAIR AS NEEDED
	VEGETATIVE FILTER		VF	USED ALONG DRAINAGE WAYS OR PROPERTY LINES TO FILTER SEDIMENT FROM RUNOFF	X	X	REDO ANY FAILING AREAS
MUD AND DUST CONTROL	STABILIZED CONSTRUCTION ENTRANCE	X	SE	PREVENTS MUD AND SEDIMENT FROM BEING PICKED UP AND CARRIED OFF-SITE	X		SCRAPE MUD AND REPLACE STONE AS NEEDED
	DUST CONTROL	X	DT	PREVENTS DUST FROM LEAVING CONSTRUCTION SITE	X		REAPPLY AS NEEDED
EROSION CONTROL	EROSION CONTROL BLANKET	X	ECB	PROTECTS SOIL, PREVENTS SEED WASHOUT AND HELPS GROW VEGETATION	X		REPLACE AS NEEDED
	TURF REINFORCEMENT MAT	X	TRM	REINFORCES TURF IN CHANNELS, SHORELINES AND HIGH FLOW AREAS		X	REPLACE AS NEEDED
	CELLULAR CONFINEMENT		CF	USED FOR SOIL STABILIZATION	X	X	REPLACE AS NEEDED
	GABIONS		GA	USED TO PREVENT EROSION IN HIGH FLOW AREAS	X	X	REPLACE AS NEEDED
	GEOTEXTILE FABRIC		GF	USED FOR EROSION AND SEDIMENT CONTROL, SOIL SEPARATION AND SOIL STABILIZATION	X	X	REPLACE AS NEEDED
	GEOBLOCK POROUS PAVEMENT		PP	USED FOR FIRE LANE ACCESS OR VEGETATIVE PAVEMENT	X	X	REPLACE AS NEEDED
SEDIMENT CONTROL	INLET PROTECTION	X	IP	USED TO PREVENT SEDIMENT FROM ENTERING THE STORM SEWER SYSTEM	X		REPLACE OR CLEAN WHEN CLOGGED
	SLOPE INTERRUPT		SI	USED TO BREAK UP RUNOFF FLOW ON A SLOPE	X		CLEAN OUT SEDIMENT WHEN HALF FULL
	DITCH CHECK	X	DIC	USED FOR SEDIMENT FLOW CONTROL IN SWALES AND CHANNELS	X	X	CLEAN OUT SEDIMENT WHEN HALF FULL
	FLOC LOG		FL	USED TO CLARIFY WATER THAT HAS SEDIMENT IN THE WATERY COLUMN	X	X	REPLACE WHEN HALF DISSOLVED
	SILT CURTAIN		SC	USED FOR SEDIMENT CONTROL IN STREAMS, PONDS, ETC.	X	X	REPLACE WHEN FABRIC IS TORN OR HOLES BEGIN TO FORM
	PUMPING DISCHARGE BAG		PB	USED FOR PUMP DISCHARGE LINES	X		REPLACE WHEN HALF FULL, FABRIC IS TORN OR HOLES BEGIN TO FORM
	CONCRETE WASHOUT	X	CW	USED TO WASH OUT CONCRETE TRUCKS	X		CLEAN OUT WHEN HALF FULL AND CLEAN WASHOUT GRAVEL AREA AS NEEDED
	STREET SWEEPING	X	SS	USED TO PREVENT SILT BUILD UP IN STREETS	X	X	CLEAN ONCE A WEEK OR AS NEEDED TO KEEP STREET CLEAN

SWPPP NOTES:

THIS PLAN HAS BEEN PREPARED TO COMPLY WITH THE PROVISIONS OF THE NATIONAL POLLUTION DISCHARGE ELIMINATION SYSTEM (NPDES) GENERAL PERMIT NUMBER ILR10, ISSUED BY THE ILLINOIS ENVIRONMENTAL PROTECTION AGENCY, WHICH AUTHORIZES STORMWATER DISCHARGES RESULTING FROM CONSTRUCTION SITE ACTIVITIES AND THE SOIL EROSION AND SEDIMENT CONTROL ORDINANCES AND REQUIREMENTS OF THE LOCAL GOVERNING AUTHORITIES.

1. SITE DESCRIPTION

A. THE FOLLOWING IS A DESCRIPTION OF THE PROPOSED CONSTRUCTION ACTIVITIES THAT ARE THE SUBJECT OF THIS PLAN:

THE SITE IMPROVEMENTS ASSOCIATED WITH THE PROPOSED DEVELOPMENT WILL INCLUDE THE FOLLOWING: MASS GRADING, PAVEMENT CONSTRUCTION, INSTALLATION OF UTILITIES INCLUDING STORM SEWERS, SANITARY SEWERS AND WATERMAIN AND SOIL EROSION AND SEDIMENTATION CONTROL MEASURES.

B. THE FOLLOWING IS A DESCRIPTION OF THE INTENDED SEQUENCE OF MAJOR ACTIVITIES WHICH WILL DISTURB SOILS FOR MAJOR PORTIONS OF THE CONSTRUCTION SITE, SUCH AS GRUBBING, EXCAVATION, AND GRADING:

THE SEQUENCE OF THE CONSTRUCTION ACTIVITIES MAY BE AS FOLLOWS: 1) INSTALL PERIMETER CONTROLS INCLUDING SILT FENCE AND STABILIZED CONSTRUCTION ENTRANCE, 2) MASS GRADING, 3) UNDERGROUND UTILITIES INSTALLATION, 4) BUILDING FOUNDATIONS, 5) FINE GRADING IN PAVEMENT AREAS AND 6) PAVEMENT AND BUILDING CONSTRUCTION. THE SOIL EROSION AND SEDIMENTATION CONTROL ITEMS WILL BE CONSTRUCTED AND MAINTAINED AS NEEDED DURING THE ABOVE CONSTRUCTION ACTIVITIES.

C. THE TOTAL AREA OF THE CONSTRUCTION SITE IS ESTIMATED TO BE 2.03 ACRES.

THE TOTAL AREA OF THE SITE THAT IS ESTIMATED TO BE DISTURBED BY EXCAVATION, GRADING, OR OTHER CONSTRUCTION ACTIVITIES IS 1.93 ACRES.

D. THE ESTIMATED RUNOFF COEFFICIENTS OF THE VARIOUS AREAS OF THE SITE AFTER CONSTRUCTION ACTIVITIES ARE COMPLETED ARE CONTAINED IN THE PROJECT DRAINAGE STUDY, TITLED STORMWATER MANAGEMENT REPORT FOR VILLAGE OF ORLAND PARK FIRING RANGE AND EOC FACILITY, AS PREPARED BY JACOB & HEFNER ASSOCIATES, INC. WHICH IS HEREBY INCORPORATED BY REFERENCE IN THIS PLAN.

THE ESTIMATED PROPOSED OVERALL SITE RUNOFF COEFFICIENT IS 0.71.

E. EXISTING DATA DESCRIBING SOILS OR QUALITY OF DISCHARGE (SEE SOILS REPORT IF AVAILABLE) POOR/FAIR/GOOD/NOT AVAILABLE: GOOD

F. NAME OF RECEIVING WATER(S): BEEMSTERBOER INDUSTRIAL PARK-OUTLOT B-DETENTION BASIN.
NAME OF ULTIMATE RECEIVING WATER(S): MARLEY CREEK TO THE DES PLAINES RIVER.

G. EXISTING AREAS EXHIBITING WETLAND CHARACTERISTICS: 0.00 ACRES.

2. CONTROLS

THIS SECTION OF THE PLAN ADDRESSES THE VARIOUS CONTROLS THAT WILL BE IMPLEMENTED FOR EACH OF THE MAJOR CONSTRUCTION ACTIVITIES DESCRIBED IN 1.B ABOVE. FOR EACH MEASURE DISCUSSED, THE CONTRACTOR(S) SHALL BE RESPONSIBLE FOR ITS IMPLEMENTATION AS INDICATED. EACH SUCH CONTRACTOR HAS SIGNED THE REQUIRED CERTIFICATION ON FORMS WHICH ARE ATTACHED TO, AND ARE A PART OF, THIS PLAN.

A. EROSION AND SEDIMENT CONTROLS

(I) STABILIZATION PRACTICES: PROVIDED BELOW IS A DESCRIPTION OF INTERIM AND PERMANENT STABILIZATION PRACTICES, INCLUDING SITE-SPECIFIC SCHEDULING OF THE IMPLEMENTATION OF THE PRACTICES. SITE PLANS WILL ENSURE THAT EXISTING VEGETATION IS PRESERVED WHERE ATTAINABLE AND DISTURBED PORTIONS OF THE SITE WILL BE STABILIZED. STABILIZATION MEASURES SHALL BE INITIATED AS SOON AS PRACTICABLE IN PORTIONS OF THE SITE WHERE CONSTRUCTION ACTIVITIES HAVE TEMPORARILY OR PERMANENTLY CEASED, BUT IN NO CASE MORE THAN 7 DAYS AFTER THE CONSTRUCTION ACTIVITY IN THAT PORTION OF THE SITE HAS TEMPORARILY OR PERMANENTLY CEASED ON ALL DISTURBED PORTIONS OF THE SITE WHERE CONSTRUCTION ACTIVITY WILL NOT OCCUR FOR A PERIOD OF 21 OR MORE CALENDAR DAYS.

WHERE THE INITIATION OF STABILIZATION MEASURES BY THE 14TH DAY AFTER CONSTRUCTION ACTIVITY TEMPORARILY OR PERMANENTLY CEASES IS PRECLUDED BY SNOW COVER, STABILIZATION MEASURES SHALL BY INITIATED AS SOON AS PRACTICABLE THEREAFTER.

THE FOLLOWING INTERIM AND PERMANENT STABILIZATION PRACTICES, AS A MINIMUM, WILL BE IMPLEMENTED TO STABILIZE THE DISTURBED AREA OF THE SITE:

1. PERMANENT SEEDING
2. SILT FENCE
3. VEGETATIVE FILTER
4. STABILIZED CONSTRUCTION ENTRANCE
5. BARRIER FILTER

(II) STRUCTURAL PRACTICES: PROVIDED BELOW IS A DESCRIPTION OF STRUCTURAL PRACTICES THAT WILL BE IMPLEMENTED, TO THE DEGREE ATTAINABLE, TO DIVERT FLOWS FROM EXPOSED SOILS, STORE FLOWS OR OTHERWISE LIMIT RUNOFF AND THE DISCHARGE OF POLLUTANTS FROM EXPOSED AREAS OF THE SITE. THE INSTALLATION OF THESE DEVICES MAY BE SUBJECT TO SECTION 404 OF THE CLEAN WATER ACT.

1. DETENTION/RETENTION POND(S)
2. STORM SEWER SYSTEM
3. RIP-RAP OUTLET PROTECTION
4. PERMANENT SEEDING

(III) DUST CONTROL: DUST CONTROL SHALL BE PROVIDED PER STANDARD 825 OF ILLINOIS URBAN MANUAL. THE FOLLOWING DUST CONTROL METHODS CAN BE USED:

1. IRRIGATION
2. SPRAY ON ADHESIVE
3. VEGETATIVE COVER
4. MULCHING

B. STORMWATER MANAGEMENT

(I) PROVIDED BELOW IS A DESCRIPTION OF MEASURES THAT WILL BE INSTALLED DURING THE CONSTRUCTION PROCESS TO CONTROL POLLUTANTS IN STORMWATER DISCHARGES THAT WILL OCCUR AFTER CONSTRUCTION OPERATIONS HAVE BEEN COMPLETED. THE INSTALLATION OF THESE DEVICES MAY BE SUBJECT TO SECTION 404 OF THE CLEAN WATER ACT.

THE PRACTICES SELECTED FOR IMPLEMENTATION WERE DETERMINED ON THE BASIS OF THE TECHNICAL GUIDANCE CONTAINED IN IEPA'S STANDARD SPECIFICATIONS FOR SOIL EROSION AND SEDIMENTATION CONTROL, AND OTHER ORDINANCES LISTED IN THE SPECIFICATIONS.

THE STORMWATER POLLUTANT CONTROL MEASURES SHALL INCLUDE:

1. SILT FENCE
2. BARRIER FILTERS
3. STORM SEWER SYSTEM
4. DETENTION/RETENTION POND(S)

(II) VELOCITY DISSIPATION DEVICES WILL BE PLACED AT DISCHARGE LOCATIONS AND ALONG THE LENGTH OF ANY OUTFALL CHANNEL AS NECESSARY TO PROVIDE A NON-EROSIVE VELOCITY FLOW FROM THE STRUCTURE TO A WATER COURSE SO THAT THE NATURAL PHYSICAL AND BIOLOGICAL CHARACTERISTICS AND FUNCTIONS ARE MAINTAINED AND PROTECTED (E.G., MAINTENANCE OF HYDROLOGIC CONDITIONS, SUCH AS THE HYDROPERIOD AND HYDRODYNAMICS PRESENT PRIOR TO THE INITIATION OF CONSTRUCTION ACTIVITIES).

STORMWATER MANAGEMENT CONTROL INCLUDES:

1. RIP-RAP FOR OUTLET PROTECTION
2. DITCH CHECKS

C. OTHER CONTROLS

(I) WASTE DISPOSAL: THE SOLID WASTE MATERIALS INCLUDING TRASH, CONSTRUCTION DEBRIS, EXCESS CONSTRUCTION MATERIALS, MACHINERY, TOOLS AND OTHER ITEMS WILL BE COLLECTED AND DISPOSED OF OFF-SITE BY THE CONTRACTOR. THE CONTRACTOR IS RESPONSIBLE TO ACQUIRE ANY PERMIT REQUIRED FOR SUCH DISPOSAL. BURNING ON THE SITE WILL NOT BE PERMITTED. NO SOLID MATERIALS, INCLUDING BUILDING MATERIALS, SHALL BE DISCHARGED INTO WATERS OF THE STATE, EXCEPT AS AUTHORIZED BY A SECTION 404 PERMIT.

(II) THE PROVISIONS OF THIS PLAN SHALL ENSURE AND DEMONSTRATE COMPLIANCE WITH APPLICABLE STATE AND/OR LOCAL WASTE DISPOSAL, SANITARY SEWER OR SEPTIC SYSTEM REGULATIONS.

ANY AND ALL SANITARY SEWAGE SHALL BE DISCHARGED TO THE EXISTING AND/OR PROPOSED SANITARY SEWER SYSTEM CONSTRUCTED PER IEPA AND LOCAL STANDARDS.

D. APPROVED STATE OR LOCAL PLANS

(I) THE MANAGEMENT PRACTICES, CONTROLS, AND OTHER PROVISIONS CONTAINED IN THIS PLAN ARE AT LEAST AS PROTECTIVE AS THE REQUIREMENTS CONTAINED IN THE ILLINOIS ENVIRONMENTAL PROTECTION AGENCY'S STANDARDS AND SPECIFICATIONS FOR SOIL EROSION AND SEDIMENT CONTROL DATED OCTOBER 1987, ILLINOIS PROCEDURES AND STANDARDS FOR URBAN SOIL EROSION AND SEDIMENTATION PLAN, AND THE MUNICIPAL SUBDIVISION ORDINANCE. REQUIREMENTS SPECIFIED IN SEDIMENT AND EROSION CONTROL SITE PLANS, STORMWATER MANAGEMENT SITE PLANS OR SITE PERMITS APPROVED BY LOCAL OFFICIALS THAT ARE APPLICABLE TO PROTECTING SURFACE WATER RESOURCES ARE, UPON SUBMITTAL OF AN NOI, TO BE AUTHORIZED TO DISCHARGE UNDER THIS PERMIT, INCORPORATED BY REFERENCE AND ARE ENFORCEABLE UNDER THIS PERMIT EVEN IF THEY ARE NOT SPECIFICALLY INCLUDED IN THE PLAN.

3. MAINTENANCE

THE FOLLOWING IS A DESCRIPTION OF PROCEDURES THAT WILL BE USED TO MAINTAIN, IN GOOD AND EFFECTIVE OPERATING CONDITIONS, VEGETATION, EROSION AND SEDIMENT CONTROL MEASURES AND OTHER PROTECTIVE MEASURES IDENTIFIED IN THIS PLAN AND THE STANDARD SPECIFICATIONS.

A. STABILIZED CONSTRUCTION ENTRANCE: THE ENTRANCE SHALL BE MAINTAINED TO PREVENT TRACKING OF SEDIMENT ONTO PUBLIC STREETS. THIS WILL BE DONE BY TOP DRESSING WITH ADDITIONAL STONES, REMOVING AND REPLACING TOP LAYER OF STONES OR WASHING THE ENTRANCE. THE SEDIMENT WASHED ON THE PUBLIC RIGHT-OF-WAY WILL BE REMOVED IMMEDIATELY.

B. VEGETATIVE EROSION CONTROL MEASURES: THE VEGETATIVE GROWTH OF TEMPORARY AND PERMANENT SEEDING, SODDING, VEGETATIVE CHANNELS, VEGETATIVE FILTER, ETC. SHALL BE MAINTAINED PERIODICALLY AND SUPPLIED WITH ADEQUATE WATERING AND FERTILIZER. THE VEGETATIVE COVER SHALL BE REMOVED AND RESEEDED AS NECESSARY.

C. SEDIMENTATION BASINS/TRAPS: SEDIMENT SHALL BE REMOVED WHEN 40-50 PERCENT OF THE TOTAL ORIGINAL CAPACITY OF THE SEDIMENT BASIN/TRAP IS FILLED WITH SEDIMENT. IN NO CASE SHALL THE SEDIMENT BE BUILT UP TO MORE THAN 1 FOOT BELOW THE CREST ELEVATION. AT THIS STAGE, THE BASIN SHALL BE CLEANED OUT TO RESTORE ITS ORIGINAL VOLUME.

D. SILT FENCE: THE DAMAGED SILT FENCE SHALL BE RESTORED TO MEET THE STANDARDS OR REMOVED AND REPLACED AS NEEDED.

E. STRAW BALE BARRIER FILTERS: THE STRAW BALE BARRIER FILTER SHALL BE INSPECTED FREQUENTLY AND SHALL BE REPAIRED OR REMOVED AND REPLACED AS NEEDED.

F. RIP-RAP OUTLET PROTECTION: RIP-RAP OUTLET PROTECTION SHALL BE INSPECTED AFTER HIGH FLOWS FOR ANY SCOUR BENEATH THE RIP-RAP OR FOR STONES THAT HAVE BEEN DISLODGED. IT SHALL BE REPAIRED IMMEDIATELY AS NEEDED.

4. INSPECTIONS

THE OWNER OR OWNER'S REPRESENTATIVE SHALL PROVIDE QUALIFIED PERSONNEL TO INSPECT DISTURBED AREAS OF THE CONSTRUCTION SITE WHICH HAVE NOT BEEN FINALLY STABILIZED, STRUCTURAL CONTROL MEASURES, AND LOCATIONS WHERE VEHICLES ENTER OR EXIT THE SITE. SUCH INSPECTIONS SHALL BE CONDUCTED AT LEAST ONCE EVERY SEVEN (7) CALENDAR DAYS AND WITHIN 24 HOURS OF THE END OF A STORM EVENT THAT IS 0.5 INCHES OR GREATER OR EQUIVALENT SNOWFALL.

A. DISTURBED AREAS AND AREAS USED FOR STORAGE OF MATERIALS THAT ARE EXPOSED TO PRECIPITATION SHALL BE INSPECTED FOR EVIDENCE OF, OR THE POTENTIAL FOR, POLLUTANTS ENTERING THE DRAINAGE SYSTEM. EROSION AND SEDIMENT CONTROL MEASURES IDENTIFIED IN THE PLAN SHALL BE OBSERVED TO ENSURE THAT THEY ARE OPERATING CORRECTLY. WHERE DISCHARGE LOCATIONS OR POINTS ARE ACCESSIBLE, THEY SHALL BE INSPECTED TO ASCERTAIN WHETHER EROSION CONTROL MEASURES ARE EFFECTIVE IN PREVENTING SIGNIFICANT IMPACTS TO RECEIVING WATERS. LOCATIONS WHERE VEHICLES ENTER OR EXIT THE SITE SHALL BE INSPECTED FOR EVIDENCE OF OFF SITE SEDIMENT TRACKING.

B. BASED ON THE RESULTS OF THE INSPECTION, THE DESCRIPTION OF POTENTIAL POLLUTANT SOURCES IDENTIFIED IN SECTION 1 ABOVE AND POLLUTION PREVENTION MEASURES IDENTIFIED IN SECTION 2 ABOVE SHALL BE REVISED AS APPROPRIATE AS SOON AS PRACTICABLE AFTER SUCH INSPECTION. ANY CHANGES TO THIS PLAN RESULTING FROM THE REQUIRED INSPECTIONS SHALL BE IMPLEMENTED WITHIN SEVEN (7) CALENDAR DAYS FOLLOWING THE INSPECTION.

C. A REPORT SUMMARIZING THE SCOPE OF THE INSPECTION, NAME(S) AND QUALIFICATIONS OF PERSONNEL MAKING THE INSPECTION, THE DATE(S) OF THE INSPECTION, MAJOR OBSERVATIONS RELATING TO THE IMPLEMENTATION OF THIS STORMWATER POLLUTION PREVENTION PLAN, AND ACTIONS TAKEN IN ACCORDANCE WITH SECTION 4.B. SHALL BE MADE AND RETAINED AS PART OF THE PLAN FOR AT LEAST THREE (3) YEARS AFTER THE DATE OF THE INSPECTION. THE REPORT SHALL BE SIGNED IN ACCORDANCE WITH PART VI.G OF THE GENERAL NPDES PERMIT.

D. IF ANY VIOLATION OF THE PROVISIONS OF THIS PLAN IS IDENTIFIED DURING THE CONDUCT OF THE CONSTRUCTION WORK COVERED BY THIS PLAN, THE RESIDENT ENGINEER OR RESIDENT TECHNICIAN SHALL COMPLETE AND FILE AN "INCIDENCE OF NONCOMPLIANCE" (ION) REPORT FOR THE IDENTIFIED VIOLATION. THE RESIDENT ENGINEER OR RESIDENT TECHNICIAN SHALL USE FORMS PROVIDED BY THE ILLINOIS ENVIRONMENTAL PROTECTION AGENCY AND SHALL INCLUDE SPECIFIC INFORMATION ON THE CAUSE OF NONCOMPLIANCE, ACTIONS WHICH WERE TAKEN TO PREVENT ANY FURTHER CAUSES OF NONCOMPLIANCE, AND A STATEMENT DETAILING ANY ENVIRONMENTAL IMPACT WHICH MAY HAVE RESULTED FROM THE NONCOMPLIANCE. ALL REPORTS OF NONCOMPLIANCE SHALL BE SIGNED BY A RESPONSIBLE AUTHORITY IN ACCORDANCE WITH PART VI. G OF THE GENERAL NPDES PERMIT. THE REPORT OF NONCOMPLIANCE SHALL BE MAILED TO THE FOLLOWING ADDRESS:

ALL PACKAGES:
ILLINOIS ENVIRONMENTAL PROTECTION AGENCY
DIVISION OF WATER POLLUTION CONTROL
ATTN: COMPLIANCE ASSURANCE SECTION
1021 NORTH GRAND AVENUE, EAST
SPRINGFIELD, IL 62794

ALL LETTERS:
ILLINOIS ENVIRONMENTAL PROTECTION AGENCY
DIVISION OF WATER POLLUTION CONTROL
ATTN: COMPLIANCE ASSURANCE SECTION
POST OFFICE BOX 19276
SPRINGFIELD, IL 62794-9276

5. NON-STORMWATER DISCHARGE

EXCEPT FOR FLOWS FROM FIRE FIGHTING ACTIVITIES, SOURCES OF NON-STORMWATER THAT MAY BE COMBINED WITH STORMWATER DISCHARGES ASSOCIATED WITH THE CONSTRUCTION ACTIVITY ADDRESSED IN THIS PLAN ARE DESCRIBED BELOW:

1. WATER MAIN FLUSHING
2. FIRE HYDRANT FLUSHING
3. WATERING FOR DUST CONTROL
4. IRRIGATION DRAINAGE FOR VEGETATIVE GROWTH FOR SEEDING, ETC.

THE FIRE HYDRANT AND WATER MAIN SHALL NOT BE FLUSHED DIRECTLY ONTO ANY EXPOSED PAVEMENT AREA OR SUBGRADE. HOSES SHALL BE USED TO DIRECT THE FLOW INTO THE STORM SEWER SYSTEM.

NPDES GENERAL CONTRACTOR CERTIFICATION

THIS CERTIFICATION STATEMENT IS A PART OF THE STORM WATER POLLUTION PREVENTION PLAN FOR THE PROJECT DESCRIBED BELOW, IN ACCORDANCE WITH NPDES GENERAL PERMIT NO. ILR10 AS ISSUED BY THE ILLINOIS ENVIRONMENTAL PROTECTION AGENCY:

PROJECT TITLE: VILLAGE OF ORLAND PARK FIRING RANGE AND EOC FACILITY

PROJECT LOCATION: ORLAND PARK (MUNICIPALITY) COOK (COUNTY) ILLINOIS (STATE)

CONTRACTOR: _____

I CERTIFY UNDER PENALTY OF LAW THAT I HAVE READ AND UNDERSTAND THE TERMS AND CONDITIONS OF THE NATIONAL POLLUTANT DISCHARGE ELIMINATION SYSTEM (NPDES) GENERAL PERMIT NO. ILR10 THAT AUTHORIZES STORMWATER DISCHARGES RESULTING FROM CONSTRUCTION ACTIVITIES AND THE PROJECT STORMWATER POLLUTION PREVENTION PLAN (SWPPP).

SIGNATURE _____ DATE _____

NPDES SUBCONTRACTOR CERTIFICATIONS

I CERTIFY UNDER PENALTY OF LAW THAT I HAVE READ AND UNDERSTAND THE TERMS AND CONDITIONS OF THE NATIONAL POLLUTANT DISCHARGE ELIMINATION SYSTEM (NPDES) GENERAL PERMIT NO. ILR10 AND THE PROJECT STORMWATER POLLUTION PREVENTION PLAN (SWPPP) AND AGREE TO FOLLOW THE BEST MANAGEMENT PRACTICES DESCRIBED THEREIN FOR ANY WORK PERFORMED ON SITE.

SUBCONTRACTOR: _____
SCOPE OF WORK: _____
SIGNATURE _____ DATE _____

SUBCONTRACTOR: _____
SCOPE OF WORK: _____
SIGNATURE _____ DATE _____

SUBCONTRACTOR: _____
SCOPE OF WORK: _____
SIGNATURE _____ DATE _____

SUBCONTRACTOR: _____
SCOPE OF WORK: _____
SIGNATURE _____ DATE _____

SUBCONTRACTOR: _____
SCOPE OF WORK: _____
SIGNATURE _____ DATE _____

STORMWATER POLLUTION PREVENTION CONSTRUCTION AND MAINTENANCE SCHEDULE

EROSION/SEDIMENT CONTROL MEASURE	INSTALLATION SEQUENCE	MAINTENANCE FREQUENCY
TEMPORARY DIVERSION SWALE AND SILT TRAPS	PRIOR TO CLEARING AND GRADING	AS NEEDED
STONE STABILIZED CONSTRUCTION ENTRANCE	PRIOR TO CLEARING AND GRADING	AS NEEDED
SILT FENCE	PRIOR TO CLEARING AND GRADING	WEEKLY, AFTER STORM EVENTS AND AS NEEDED
EXISTING INLET PROTECTION	PRIOR TO CLEARING AND GRADING	WEEKLY, AFTER STORM EVENTS AND AS NEEDED
TREE PROTECTION	PRIOR TO CLEARING AND GRADING	WEEKLY, AFTER STORM EVENTS AND AS NEEDED
TEMPORARY DIVERSIONS	ALONG WITH ROUGH GRADING	WEEKLY, AFTER STORM EVENTS AND AS NEEDED
TEMPORARY SEEDING	AFTER ROUGH GRADING	WATER AS NEEDED
PERMANENT SEEDING, SOD, LANDSCAPING	AFTER FINISH GRADING	WATER AS NEEDED
EROSION CONTROL MATTING	AFTER FINISH GRADING	WEEKLY, AFTER STORM EVENTS AND AS NEEDED
INLET PROTECTION	AFTER EACH INLET IS CONSTRUCTED	WEEKLY, AFTER STORM EVENTS AND AS NEEDED
REMOVAL OF EROSION/SEDIMENT CONTROL MEASURES	AFTER ALL DISTURBED AREAS ARE STABILIZED	N/A

SEEDING CHART

STABILIZATION TYPE	JAN.	FEB.	MARCH	APRIL	MAY	JUNE	JULY	AUG.	SEPT.	OCT.	NOV.	DEC.
PERMANENT SEEDING			A			*	*					
DORMANT SEEDING	B										B	
TEMPORARY SEEDING			C				D					
SODDING			E **									
MULCHING	F											

A. KENTUCKY BLUEGRASS 90 LBS./ACRE MIXED WITH PERENNIAL RYEGRASS 30 LBS/ACRE

B. KENTUCKY BLUEGRASS 135 LBS/ACRE MIXED WITH PERENNIAL RYEGRASS 45 LBS/ACRE + 2 TONS STRAW MULCH/ACRE

C. SPRING OATS 100 LBS/ACRE

D. WHEAT OR CEREAL RYE 150 LBS/ACRE

E. SOD

F. STRAW MULCH 2 TONS/ACRE

* IRRIGATION NEEDED DURING JUNE AND JULY

** IRRIGATION NEEDED FOR 2 TO 3 WEEKS AFTER APPLYING SOD

VILLAGE OF ORLAND PARK ILLINOIS

Village of Orland Park Illinois

POLICE DEPARTMENT FIRING RANGE AND EOC FACILITY

10609 163rd St. Orland Park, IL 60467

JACOB & HEFNER ASSOCIATES
1333 Butterfield Rd, Suite 300, Downers Grove, IL 60515
PHONE: (630) 652-4600, FAX: (630) 652-4601
www.jacobandhefner.com

PLANNING DIVISION APPROVED
Case No: 2023-0508
Date: 12/19/2023
W/Conditions: Yes
W/Out Conditions:
VILLAGE OF ORLAND PARK

ISSUE
ISSUED FOR REVIEW - 90%

REV	DATE	DESCRIPTION
3	01/16/24	ISSUED FOR REVIEW - 90%
2	12/01/23	ISSUED FOR REVIEW - 60%
1	10/18/23	ISSUED FOR REVIEW - 30%

KEY PLAN

N.T.S.

PROJECT NO.	H064
DESIGNED BY	--
DRAWN BY	--
CHECKED BY	--
APPROVED BY	--

SHEET TITLE
STORMWATER POLLUTION PREVENTION PLAN

DATE: 01/16/24
REV. 3
SHEET NO. C7.0

Copyright © 2024 Jacob & Hefner Associates, INC.

SE STABILIZED CONSTRUCTION ENTRANCE PLAN

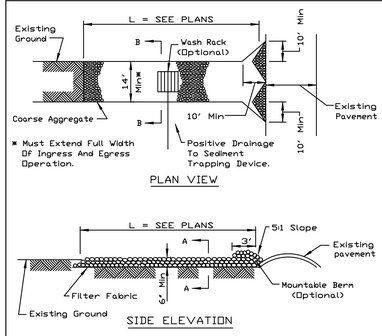

NOTES:
1. Filter fabric shall meet the requirements of material specification 592 GEOTEXTILE, Table I or 2, Class I, II or IV and shall be placed over the cleared area prior to the placing of rock.
2. Rock or reclaimed concrete shall meet one of the following IDOT coarse aggregate gradation, CA-1, CA-2, CA-3 or CA-4 and be placed according to construction specification 25 ROCKFILL using placement Method 1 and Class III compaction.
3. Any drainage facilities required because of washing shall be constructed according to manufacturers specifications.
4. If wash racks are used they shall be installed according to the manufacturer's specifications.

REFERENCE		STANDARD DWG. NO.
Project		IL-630
Designed	Date	SHEET 1 OF 2
Checked	Date	DATE 8-18-94
Approved	Date	

NRCS Natural Resources Conservation Service

SE STABILIZED CONSTRUCTION ENTRANCE PLAN

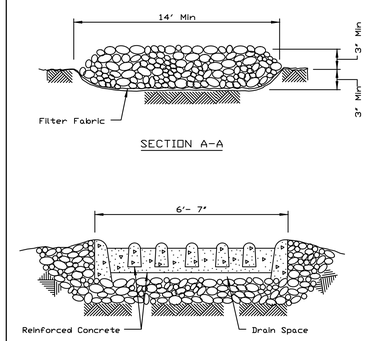

REFERENCE		STANDARD DWG. NO.
Project		IL-630
Designed	Date	SHEET 2 OF 2
Checked	Date	DATE 8-18-94
Approved	Date	

NRCS Natural Resources Conservation Service

TP TREE PROTECTION - FENCING

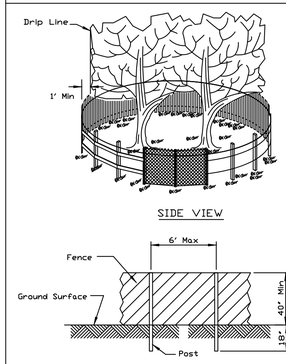

NOTES:
1. The fence shall be located a minimum of 1 foot outside the drip line of the tree to be saved and in no case closer than 5 feet to the trunk of any tree.
2. Fence posts shall be either standard steel posts or wood posts with a minumum cross sectional area of 3.0 sq. in.
3. The fence may be either 40" high snow fence, 40" plastic web fencing or any other material as approved by the engineer/inspector.

REFERENCE		STANDARD DWG. NO.
Project		IL-690
Designed	Date	SHEET 1 OF 1
Checked	Date	DATE 4-7-94
Approved	Date	

NRCS Natural Resources Conservation Service

CW CONCRETE WASHOUT DETAIL

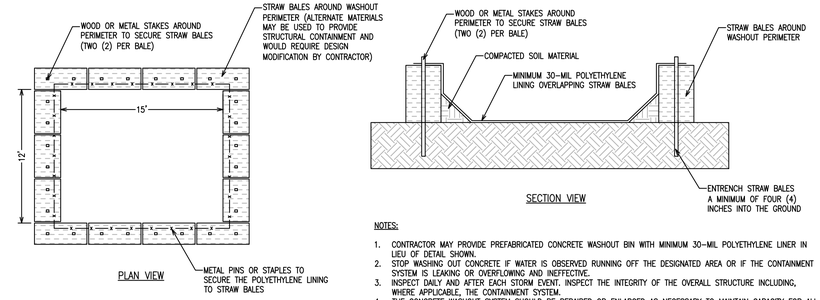

NOTES:
1. CONTRACTOR MAY PROVIDE PREFABRICATED CONCRETE WASHOUT BIN WITH MINIMUM 30-MIL POLYETHYLENE LINER IN LIEU OF DETAIL SHOWN.
2. STOP WASHING OUT CONCRETE IF WATER IS OBSERVED RUNNING OFF THE DESIGNATED AREA OR IF THE CONTAINMENT SYSTEM IS LEAKING OR OVERFLOWING AND INEFFECTIVE.
3. INSPECT DAILY AND AFTER EACH STORM EVENT. INSPECT THE INTEGRITY OF THE OVERALL STRUCTURE INCLUDING, WHERE APPLICABLE, THE CONTAINMENT SYSTEM.
4. THE CONCRETE WASHOUT SYSTEM SHOULD BE REPAIRED OR ENLARGED AS NECESSARY TO MAINTAIN CAPACITY FOR ALL CONCRETE WASTE.

ECB EROSION CONTROL BLANKET DETAIL

NOTES:
1. PREPARE SOIL BEFORE INSTALLING ROLLED EROSION CONTROL PRODUCTS (RECP's), INCLUDING ANY NECESSARY APPLICATION OF LIME, FERTILIZER, AND SEED (NOTE: WHEN USING CELL-O-SEED DO NOT SEED PREPARED AREA. CELL-O-SEED MUST BE INSTALLED WITH PAPER SIDE DOWN).
2. BEGIN AT THE TOP OF THE SLOPE BY ANCHORING THE RECP's IN A 6" (15 CM) DEEP X 6" (15 CM) WIDE TRENCH WITH APPROXIMATELY 12" (30cm) OF RECP's EXTENDED BEYOND THE UP-SLOPE PORTION OF THE TRENCH. ANCHOR THE RECP's WITH A ROW OF STAPLES/STAKES APPROXIMATELY 12" (30 CM) APART IN THE BOTTOM OF THE TRENCH. BACKFILL AND COMPACT THE TRENCH AFTER STAPLING. APPLY SEED TO COMPACTED SOIL AND FOLD REMAINING 12" (30 CM) PORTION OF RECP's BACK OVER SEED AND COMPACTED SOIL. SECURE RECP's OVER COMPACTED SOIL WITH A ROW OF STAPLES/STAKES SPACED APPROXIMATELY 12" (30 CM) APART ACROSS THE WIDTH OF THE RECP's.
3. ROLL THE RECP's (A.) DOWN OR (B.) HORIZONTALLY ACROSS THE SLOPE. RECP's WILL UNROLL WITH APPROPRIATE SIDE AGAINST THE SOIL SURFACE. ALL RECP's MUST BE SECURELY FASTENED TO SOIL SURFACE BY PLACING STAPLES/STAKES IN APPROPRIATE LOCATIONS AS SHOWN IN THE STAPLE PATTERN GUIDE. WHEN USING THE DOT SYSTEM, STAPLES/STAKES SHOULD BE PLACED THROUGH EACH OF THE COLORED DOTS CORRESPONDING TO THE APPROPRIATE STAPLE PATTERN.
4. THE EDGES OF PARALLEL RECP's MUST BE STAPLED WITH APPROXIMATELY 2"-5" (5 CM-12.5 CM) OVERLAP DEPENDING ON RECP's TYPE.
5. CONSECUTIVE RECP's SPLICED DOWN THE SLOPE MUST BE PLACED END OVER END (SHINGLE STYLE) WITH AN APPROXIMATE 3" (7.5 CM) OVERLAP. STAPLE THROUGH OVERLAPPED AREA, APPROXIMATELY 12" (30 CM) APART ACROSS ENTIRE RECP's WIDTH.
6. ONLY BIODEGRADABLE STAPLES SHALL BE USED (NOTE: IN LOOSE SOIL CONDITIONS, THE USE OF STAPLE OR STAKE LENGTHS GREATER THAN 6" (15 CM) MAY BE NECESSARY TO PROPERLY SECURE THE RECP's).

NORTH AMERICAN GREEN
1-800-772-2040
WWW.NAGREEN.COM

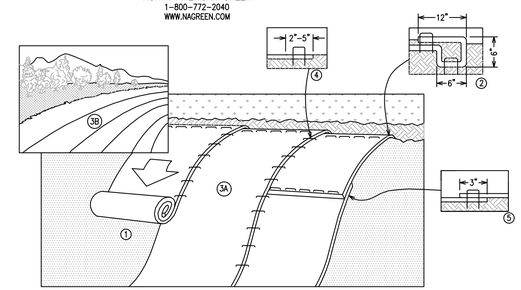

SF SILT FENCE DETAIL

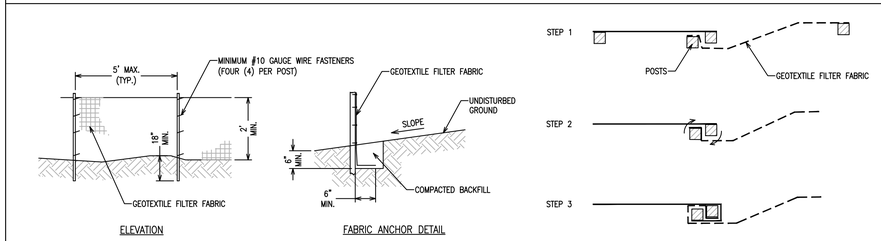

NOTES:
1. TEMPORARY SILT FENCE SHALL BE INSTALLED AROUND PROJECT PERIMETER PRIOR TO ANY GRADING WORK IN THE AREA TO BE PROTECTED. THEY SHALL BE MAINTAINED THROUGHOUT THE CONSTRUCTION PERIOD AND REMOVED IN CONJUNCTION WITH THE FINAL GRADING AND SITE STABILIZATION.
2. GEOTEXTILE FILTER FABRIC SHALL BE APPROVED BY THE ENGINEER PRIOR TO CONSTRUCTION.
3. FENCE POSTS SHALL BE EITHER STANDARD STEEL OR WOOD POSTS WITH A MINIMUM CROSS SECTIONAL AREA OF THREE (3) SQUARE INCHES.

NOTES:
1. PLACE THE END POST OF THE SECOND FENCE INSIDE THE END POST OF THE FIRST FENCE.
2. ROTATE BOTH POSTS AT LEAST 180 DEGREES IN A CLOCKWISE DIRECTION TO CREATE A TIGHT SEAL WITH THE FABRIC MATERIAL.
3. DRIVE BOTH POSTS A MINIMUM OF EIGHTEEN (18) INCHES INTO THE GROUND AND BURY THE FLAP.

IP INLET PROTECTION DETAIL

FLEXSTORM
1-866-287-8655
WWW.INLETFILTERS.COM.COM

IPP FLexXstorm Inlet Filter Specifications			
Material Property	*Test Method*	*Value (min ave)*	
> Inner Filter Bag Specs (2 ft² min vol)		Non-Woven	Woven Mono
Grab Tensile	ASTM D 4632	100 lbs	200 lbs
Puncture Strength	ASTM D 4833	65 lbs	90 lbs
Trapezoidal Tear	ASTM D 4533	45 lbs	75 lbs
UV Resistance	ASTM D 4355	70% at 500 hrs	90%
App Open Size (AOS)	ASTM D 4751	70 sieve (.212 mm)	40 sieve (.425 mm)
Permittivity	ASTM D 4491	2.0 /sec	2.1/sec
Water Flow Rate	ASTM D 4491	145 gpm/sqft	145 gpm/sqft
> Polyester Outer Reinforcement Bag Specifications			
Weight	ASTM D 3776	4.55 oz/sqyd +/- 15%	
Thickness	ASTM D 1777	.040 +/- .005	
> Frame Construction			
A36 Structural Steel; 11 Guage; Zinc Plated	ASTM A 576	*Tensile Strength > 58,000 psi; Yield Strength > 36,000 psi*	

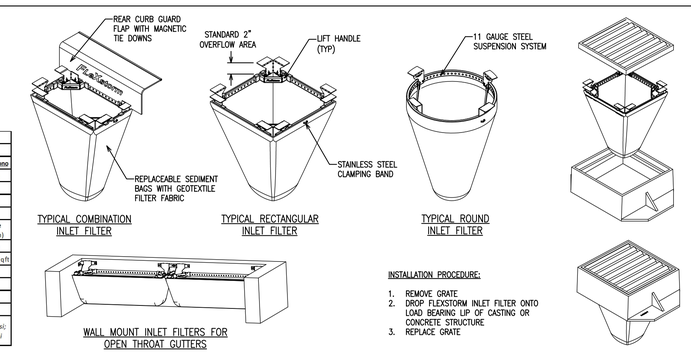

INSTALLATION PROCEDURE:
1. REMOVE GRATE
2. DROP FLEXSTORM INLET FILTER ONTO LOAD BEARING LIP OF CASTING OR CONCRETE STRUCTURE
3. REPLACE GRATE

VILLAGE OF ORLAND PARK ILLINOIS

Village of Orland Park Illinois

POLICE DEPARTMENT FIRING RANGE AND EOC FACILITY

10609 163rd St. Orland Park, IL 60467

JACOB & HEFNER ASSOCIATES
1333 Butterfield Rd, Suite 300, Downers Grove, IL 60515
PHONE: (630) 652-6600, FAX: (630) 652-6601
www.jacobandhefner.com

PLANNING DIVISION APPROVED
Case No: 2023-0508
Date: 12/19/2023
W/Conditions: Yes
W/Out Conditions:
VILLAGE OF ORLAND PARK

ISSUE
ISSUED FOR REVIEW - 90%

REV	DATE	DESCRIPTION
3	01/16/24	ISSUED FOR REVIEW - 90%
2	12/01/23	ISSUED FOR REVIEW - 60%
1	10/18/23	ISSUED FOR REVIEW - 30%

KEY PLAN

N.T.S.

PROJECT NO.	H064
DESIGNED BY	--
DRAWN BY	--
CHECKED BY	--
APPROVED BY	--

SHEET TITLE
STORMWATER POLLUTION PREVENTION PLAN

DATE: 01/16/24
REV. 3
SHEET NO. C7.1

Copyright © 2024 Jacob & Hefner Associates, INC.

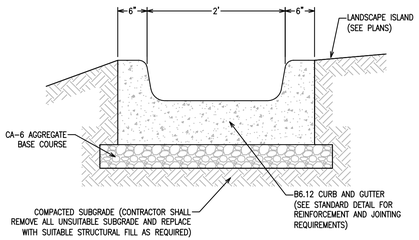

NOTES:

1. SEE PLANS FOR LOCATIONS AND ADDITIONAL DIMENSIONS.
2. REFER TO THE TYPICAL COMBINATION CONCRETE CURB AND GUTTER TYPE B6.12 DETAIL FOR ADDITIONAL INFORMATION AND CONSTRUCTION REQUIREMENTS.

CURB SCUPPER DETAIL

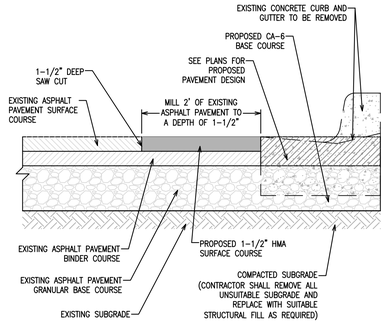

NOTE:

1. EXISTING ROADWAY PAVEMENT SECTION IS SHOWN FOR REFERENCE ONLY.

PAVEMENT PATCHING AT CURB AND GUTTER REMOVAL DETAIL

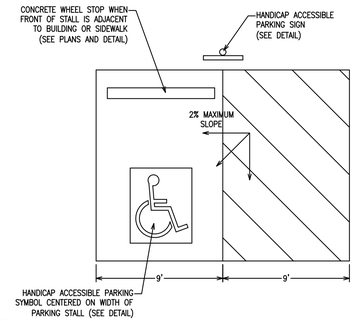

NOTES:

1. ALL PAVEMENT STRIPING WITHIN HANDICAP ACCESSIBLE PARKING STALLS SHALL BE YELLOW UNLESS OTHERWISE DIRECTED BY LOCAL BUILDING CODES.
2. MAXIMUM SLOPE WITHIN ALL HANDICAP ACCESSIBLE PARKING STALLS SHALL NOT EXCEED 2% IN ANY DIRECTION.

HANDICAP ACCESSIBLE PARKING STALL DETAIL

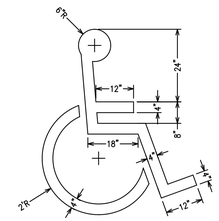

NOTE:

1. SYMBOL SHALL BE CENTERED ON WIDTH OF PARKING STALL AND PAINTED WHITE ON BLUE BACKGROUND UNLESS OTHERWISE DIRECTED BY LOCAL BUILDING CODES.

HANDICAP ACCESSIBLE PARKING SYMBOL DETAIL

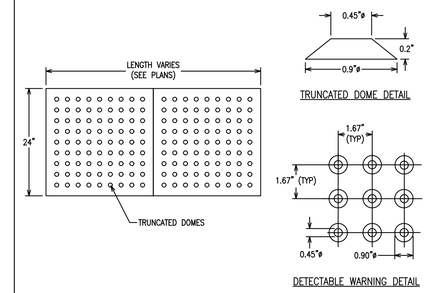

NOTES:

1. DETECTABLE WARNINGS SHALL BE 10-GUAGE GALVANIZED STEEL TUFF TILE OR APPROVED EQUAL.
2. TILES SHALL CONTRAST VISUALLY WITH ADJACENT WALKING SURFACES AND SHALL BE COLORED SAFETY RED, FED 31350, COLOR ID: SRD UNLESS OTHERWISE DIRECTED BY LOCAL BUILDING CODES.
3. TILES SHALL BE INSTALLED IN ACCORDANCE WITH MANUFACTURER'S SPECIFICATIONS AND RECOMMENDATIONS.

DETECTABLE WARNING DETAIL

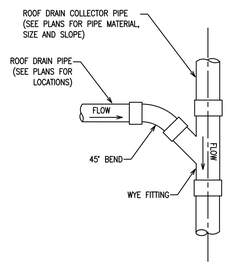

NOTE:

1. CONTRACTOR SHALL PROVIDE RISER PIPE AND ADDITIONAL FITTINGS AS NECESSARY TO CONNECT ROOF DRAIN LEADERS TO ROOF DRAIN COLLECTOR PIPE.

ROOF DRAIN WYE CONNECTION DETAIL

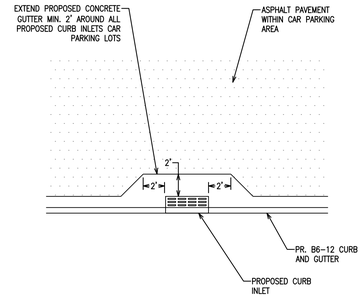

INLET APRON DETAIL

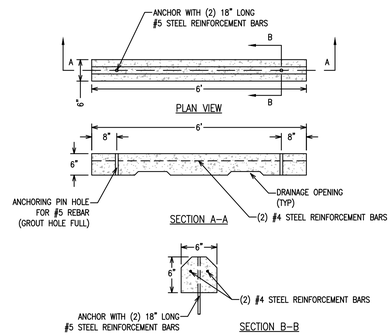

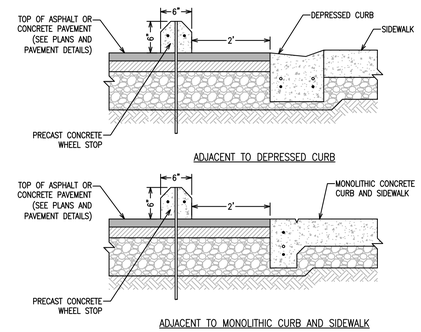

CONCRETE WHEEL STOP DETAIL

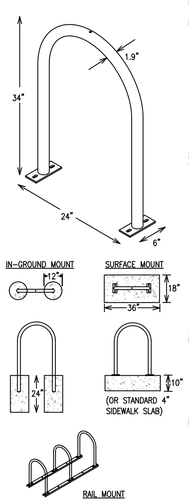

CAPACITY	2 BIKES
MATERIALS	1.5" SCHEDULE 40 PIPE (1.9" OD)

FINISHES

- ☐ GALVANIZED AN AFTER FABRICATION HOT DIPPED GALVANIZED FINISH IS OUR STANDARD OPTION.
- ☐ POWDER COAT OUR POWDER COAT FINISH ASSURES A HIGH LEVEL OF ADHESION AND DURABILITY BY FOLLOWING THESE STEPS:
  1. SANDBLAST
  2. EPOXY PRIMER ELECTROSTATICALLY APPLIED
  3. FINAL THICK TGIC POLYESTER POWDER COAT
- ☐ STAINLESS
  STAINLESS STEEL: 304 GRADE STAINLESS STEEL MATERIAL FINISHED IN EITHER A HIGH POLISHED SHINE OR A SATIN FINISH.

MOUNT OPTIONS

- ☐ SURFACE
  FOOT MOUNT HAS TWO 2.5"X 6"X .025" FEET WITH TWO ANCHORS PER FOOT. SPECIFY FOOT MOUNT FOR THIS OPTION. TAMPER-RESISTANT FASTENERS AVAILABLE UPON REQUEST.
- ☐ IN-GROUND
  IN-GROUND MOUNT IS EMBEDDED INTO CONCRETE BASE. SPECIFY IN-GROUND MOUNT FOR THIS OPTION
- ☐ RAIL
  RAIL MOUNTED DOWNTOWN RACKS ARE BOLTED TO TWO PARALLEL RAILS WHICH CAN BE LEFT FREESTANDING OR ANCHORED TO THE GROUND. RAILS ARE HEAVY DUTY 3"X 1.4"X 3/16" THICK GALVANIZED MOUNTING RAILS. SPECIFY RAIL MOUNT FOR THIS OPTION.

OPTIONAL LEAN BAR

- ☐ ADD LEAN BAR

☒ FINISHES, MOUNT OPTIONS, AND OPTIONAL LEAN BAR SELECTIONS BY OWNER (CONTRACTOR TO VERIFY SELECTION WITH OWNER PRIOR TO ORDERING)

HOOP BIKE RACK

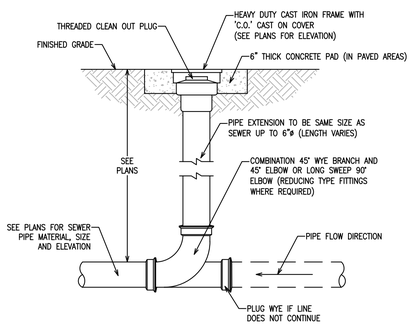

NOTE:

1. SEE TRENCH SECTION DETAIL FOR PIPE BEDDING AND BACKFILL REQUIREMENTS.

SEWER CLEAN OUT DETAIL

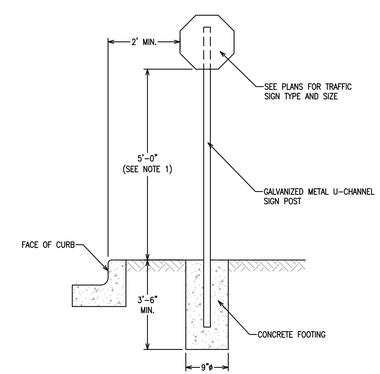

NOTES:

1. TRAFFIC SIGN POSTS SHALL BE LOCATED A MINIMUM OF 2' FROM FACE OF CURB AND SIGNS SHALL BE INSTALLED WITH A MINIMUM HEIGHT OF FIVE (5) FEET ABOVE FINISHED PAVEMENT OR GRADE ELEVATION UNLESS OTHERWISE DIRECTED BY LOCAL BUILDING CODES.
2. TRAFFIC SIGNS SHALL BE IN FURNISHED IN ACCORDANCE WITH THE LATEST U.S. DEPARTMENT OF TRANSPORTATION FEDERAL HIGHWAY ADMINISTRATION "MANUAL ON UNIFORM TRAFFIC CONTROL DEVICES."

TRAFFIC SIGN DETAIL – GRASS AREA

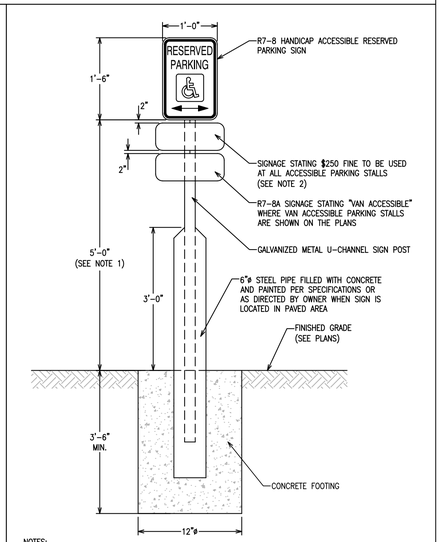

NOTES:

1. ACCESSIBLE PARKING SIGNS SHALL BE CENTERED AT THE FRONT OF EACH PARKING STALL AND INSTALLED WITH A MINIMUM HEIGHT OF FIVE (5) FEET ABOVE FINISHED PAVEMENT OR GRADE ELEVATION UNLESS OTHERWISE DIRECTED BY LOCAL BUILDING CODES.
2. CONTRACTOR SHALL VERIFY FINE AMOUNT WITH LOCAL BUILDING CODES PRIOR TO INSTALLATION.

HANDICAP ACCESSIBLE PARKING SIGN DETAIL

VILLAGE OF ORLAND PARK ILLINOIS

Village of Orland Park Illinois

POLICE DEPARTMENT FIRING RANGE AND EOC FACILITY

10609 163rd St. Orland Park, IL 60467

JACOB & HEFNER ASSOCIATES
1333 Butterfield Rd, Suite 300, Downers Grove, IL 60515
PHONE: (630) 652-4600, FAX: (630) 652-4601
www.jacobandhefner.com

PLANNING DIVISION APPROVED

Case No: 2023-0508
Date: 12/19/2023
W/Conditions: Yes
W/Out Conditions:

VILLAGE OF ORLAND PARK

ISSUE
ISSUED FOR REVIEW - 90%

REV	DATE	DESCRIPTION
3	01/16/24	ISSUED FOR REVIEW - 90%
2	12/01/23	ISSUED FOR REVIEW - 60%
1	10/18/23	ISSUED FOR REVIEW - 30%

KEY PLAN

N.T.S.

PROJECT NO.	H064
DESIGNED BY	--
DRAWN BY	--
CHECKED BY	--
APPROVED BY	--

SHEET TITLE

DETAILS

DATE: 01/16/24
REV. 3
SHEET NO. C8.0

Copyright © 2024 Jacob & Hefner Associates, INC.

PROJECT SUMMARY

CALCULATION DETAILS
• LOADING = HS20/HS25
• APPROX. LINEAR FOOTAGE = 519 LF

STORAGE SUMMARY
• STORAGE VOLUME REQUIRED = 27,443 CF
• PIPE STORAGE VOLUME = 22,907 CF
• BACKFILL STORAGE VOLUME = 4,794 CF
• TOTAL STORAGE PROVIDED = 27,701 CF
• STONE VOID = 36%

PIPE DETAILS
• DIAMETER = 90"
• CORRUGATION = 5x1
• GAGE = 16
• COATING = ALT2
• WALL TYPE = XFILTRATION
• BARREL SPACING = 18"

BACKFILL DETAILS
• WIDTH AT ENDS = 12"
• ABOVE PIPE = 0"
• WIDTH AT SIDES = 12"
• BELOW PIPE = 0"

STUB INFORMATION		
PIECE	STUB INVERT	SYSTEM INVERT
4"Ø STUB A1	691.10	691.10
15"Ø STUB A3	692.73	691.10
4"Ø STUB B2	691.10	691.10
12"Ø STUB B3	692.68	691.10
12"Ø STUB F2	695.12	691.10

RISER INFORMATION		
PIECE	RISER RIM	SYSTEM INVERT
24"Ø RISER B1	701.20	691.10
24"Ø RISER C2	700.80	691.10
24"Ø RISER G1	701.00	691.10
24"Ø RISER G2	701.00	691.10

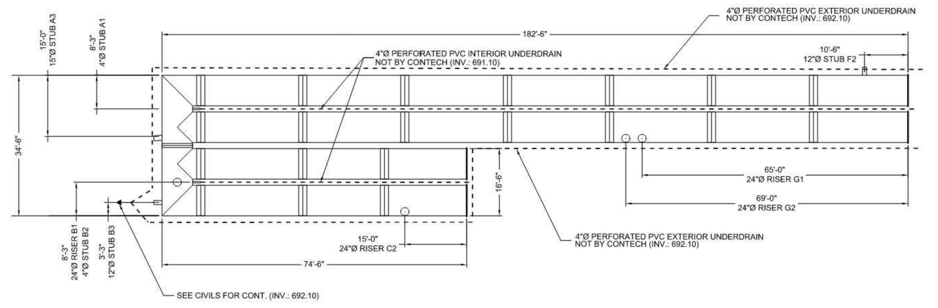

NOTES
• ALL RISER AND STUB DIMENSIONS ARE TO CENTERLINE. ALL ELEVATIONS, DIMENSIONS, AND LOCATIONS OF RISERS AND INLETS, SHALL BE VERIFIED BY THE ENGINEER OF RECORD PRIOR TO RELEASING FOR FABRICATION.
• ALL FITTINGS AND REINFORCEMENT COMPLY WITH ASTM A998.
• ALL RISERS AND STUBS ARE 2⅔" x ½" CORRUGATION AND 16 GAGE UNLESS OTHERWISE NOTED.
• RISERS TO BE FIELD TRIMMED TO GRADE.
• QUANTITY OF PIPE SHOWN DOES NOT PROVIDE EXTRA PIPE FOR CONNECTING THE SYSTEM TO EXISTING PIPE OR DRAINAGE STRUCTURES. OUR SYSTEM AS DETAILED PROVIDES NOMINAL INLET AND/OR OUTLET PIPE STUB FOR CONNECTION TO EXISTING DRAINAGE FACILITIES. IF ADDITIONAL PIPE IS NEEDED IT IS THE RESPONSIBILITY OF THE CONTRACTOR.
• BAND TYPE TO BE DETERMINED UPON FINAL DESIGN.
• THE PROJECT SUMMARY IS REFLECTIVE OF THE DYODS DESIGN, QUANTITIES ARE APPROX. AND SHOULD BE VERIFIED UPON FINAL DESIGN AND APPROVAL. FOR EXAMPLE, TOTAL EXCAVATION DOES NOT CONSIDER ALL VARIABLES SUCH AS SHORING AND ONLY ACCOUNTS FOR MATERIAL WITHIN THE ESTIMATED EXCAVATION FOOTPRINT.
• THESE DRAWINGS ARE FOR CONCEPTUAL PURPOSES AND DO NOT REFLECT ANY LOCAL PREFERENCES OR REGULATIONS. PLEASE CONTACT YOUR LOCAL CONTECH REP FOR MODIFICATIONS.

ASSEMBLY
SCALE: 1" = 20'

CONTECH ENGINEERED SOLUTIONS LLC — www.ContechES.com — 9025 Centre Pointe Dr., Suite 400, West Chester, OH 45069 — 800-338-1122 513-645-7000 513-645-7993 FAX
CONTECH CMP DETENTION SYSTEMS — CONTECH DYODS DRAWING

DYO42620 Police Department Firing Range and EOC Facility
90" CMP Detention System
Orland Park, IL
DETENTION SYSTEM

PROJECT No.: 29250 | SEQ. No.: 42620 | DATE: 12/28/2023 | DESIGNED: DYO | DRAWN: DYO | CHECKED: DYO | APPROVED: DYO | SHEET NO.: 1

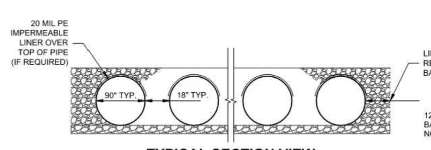

TYPICAL SECTION VIEW
NOT TO SCALE

NOTE: IF SALTING AGENTS FOR SNOW AND ICE REMOVAL ARE USED ON OR NEAR THE PROJECT, A GEOMEMBRANE BARRIER IS RECOMMENDED WITH THE SYSTEM. THE GEOMEMBRANE LINER IS INTENDED TO HELP PROTECT THE SYSTEM FROM THE POTENTIAL ADVERSE EFFECTS THAT MAY RESULT FROM A CHANGE IN THE SURROUNDING ENVIRONMENT OVER A PERIOD OF TIME. PLEASE REFER TO THE CORRUGATED METAL PIPE DETENTION DESIGN GUIDE FOR ADDITIONAL INFORMATION.

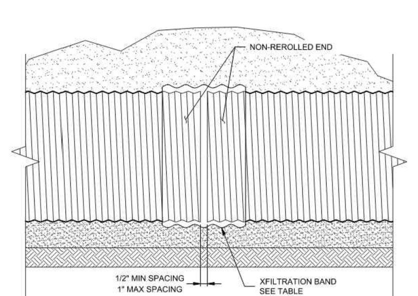

XFILTRATION BAND		
DIAMETER	BAND	FASTENER
UP TO 84"Ø	5-C OR H-12	STD. PLANT FASTENER WITH NO GASKET
84"Ø +	10-C	STD. PLANT FASTENER WITH NO GASKET

XFILTRATION JOINT DETAIL
NOT TO SCALE

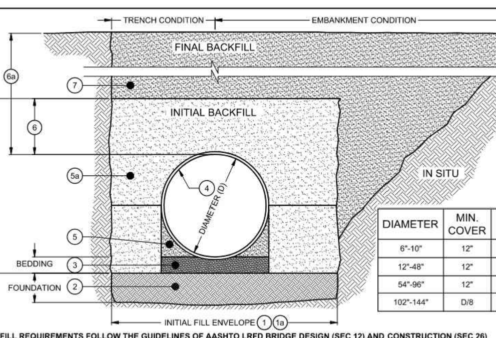

DIAMETER	MIN. COVER	CORR. PROFILE
6"-10"	12"	1 1/2" x 1/4"
12"-48"	12"	2 2/3" x 1/2"
54"-96"	12"	3" x 1", 5" x 1"
102"-144"	D/8	3" x 1", 5" x 1"

BACKFILL REQUIREMENTS FOLLOW THE GUIDELINES OF AASHTO LRFD BRIDGE DESIGN (SEC 12) AND CONSTRUCTION (SEC 26)

1. MINIMUM TRENCH WIDTH MUST ALLOW ROOM FOR PROPER COMPACTION OF HAUNCH MATERIALS UNDER THE PIPE. THE MINIMUM TRENCH WIDTH (12.6.6.1):
PIPE ≤ 12": D + 16"
PIPE > 12": 1.5D + 12"

1a. MINIMUM EMBANKMENT WIDTH (IN FEET) FOR INITIAL FILL ENVELOPE (12.6.6.2):
PIPE < 24": 3.0D
PIPE 24" - 144": D + 4'0"
PIPE > 144": D + 10'0"

2. THE FOUNDATION UNDER THE PIPE AND SIDE BACKFILL SHALL BE ADEQUATE TO SUPPORT THE LOADS ACTING UPON IT (26.5.2).
3. BEDDING MATERIAL SHALL BE A RELATIVELY LOOSE GRANULAR (CA-7) MATERIAL THAT IS ROUGHLY SHAPED TO FIT THE BOTTOM OF THE PIPE, AND A MINIMUM OF TWICE THE CORRUGATION DEPTH IN THICKNESS, WITH THE MAXIMUM PARTICLE SIZE OF ONE-HALF OF THE CORRUGATION DEPTH (26.3.8.1, 26.5.3).
4. CORRUGATED STEEL PIPE (CSP / HEL-COR).
5. HAUNCH ZONE MATERIAL SHALL BE HAND SHOVELED OR SHOVEL SLICED INTO PLACE TO ALLOW FOR PROPER COMPACTION (26.5.4).
5a. INITIAL BACKFILL FOR PIPE EMBEDMENT SHALL BE FREE DRAINING ANGULAR WASHED STONE 3/8" MINIMUM PARTICLE SIZE (CA-7), COMPACTED TO 90% STANDARD PROCTOR (T 99). MAXIMUM PARTICLE SIZE NOT TO EXCEED 3" (12.4.1.2). ALL LIFTS PLACED IN A CONTROLLED MANNER. IT IS RECOMMENDED THAT LIFTS NOT EXCEED AN 8" UNCOMPACTED LIFT HEIGHT TO PREVENT UNEVEN LOADING, AND THE LESSER OF 1/3 THE DIAMETER OR 24" AS THE MAXIMUM DIFFERENTIAL SIDE-TO-SIDE (26.5.4).
6. BACKFILL ABOVE PIPE SHALL INCLUDE GRANULAR ROAD BASE MATERIAL (CA-6).
6a. TOTAL HEIGHT OF COMPACTED COVER FOR CONVENTIONAL HIGHWAY LOADS IS MEASURED FROM TOP OF PIPE TO BOTTOM OF FLEXIBLE PAVEMENT OR TOP OF RIGID PAVEMENT (12.6.6.3).
7. FINAL BACKFILL MATERIAL SELECTION AND COMPACTION REQUIREMENTS SHALL FOLLOW THE PROJECT PLANS AND SPECIFICATIONS PER THE ENGINEER OF RECORD (26.5.4.1).

NOTES:
• GEOTEXTILE SHOULD BE CONSIDERED FOR USE TO PREVENT SOIL MIGRATION INTO VARYING SOIL TYPES (PROJECT ENGINEER).
• FOR MULTIPLE BARREL INSTALLATIONS THE RECOMMENDED STANDARD SPACING BETWEEN PARALLEL PIPE RUNS SHALL BE PIPE DIA./2 BUT NO LESS THAN 12", OR 36" FOR PIPE DIAMETERS 72" AND LARGER. CONTACT YOUR CONTECH REPRESENTATIVE FOR NONSTANDARD SPACING (TABLE C12.6.7-1).

TYPICAL BACKFILL DETAIL
NOT TO SCALE

DYO42620 Police Department Firing Range and EOC Facility
90" CMP Detention System
Orland Park, IL
DETENTION SYSTEM

PROJECT No.: 29250 | SEQ. No.: 42620 | DATE: 12/15/2023 | DESIGNED: DYO | DRAWN: DYO | CHECKED: DYO | APPROVED: DYO | SHEET NO.: 2

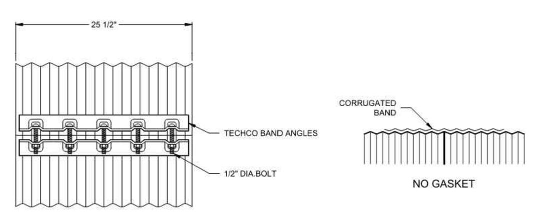

CONNECTION DETAIL
24" TECHCO

2 2/3"x1/2" RIVETED PIPE

GENERAL NOTES:
1. JOINT IS TO BE ASSEMBLED PER AASHTO BRIDGE CONSTRUCTION SPECIFICATION SEC 26.4.2.4.
2. BAND MATERIALS AND/OR COATING CAN VARY BY LOCATION. CONTACT YOUR CONTECH REPRESENTATIVE FOR AVAILABILITY.
3. BANDS ARE SHAPED TO MATCH THE PIPE-ARCH WHEN APPLICABLE.
4. BANDS ARE NORMALLY FURNISHED AS FOLLOWS:
   • 12" THRU 48" 1-PIECE
   • 54" THRU 96" 2-PIECES
   • 102" THRU 144" 3-PIECES
5. BAND FASTENERS ARE ATTACHED WITH SPOT WELDS, RIVETS OR HAND WELDS.
6. ALL CMP IS REROLLED TO HAVE ANNULAR END CORRUGATIONS OF 2 2/3"x1/2"
7. DIMENSIONS ARE SUBJECT TO MANUFACTURING TOLERANCES.
8. ORDER SHALL DESIGNATE GASKET OPTION, IF REQUIRED (SEE DETAILS ABOVE).

10-C BAND DETAIL
NOT TO SCALE

DYO42620 Police Department Firing Range and EOC Facility
90" CMP Detention System
Orland Park, IL
DETENTION SYSTEM

PROJECT No.: 29250 | SEQ. No.: 42620 | DATE: 12/15/2023 | DESIGNED: DYO | DRAWN: DYO | CHECKED: DYO | APPROVED: DYO | SHEET NO.: 3

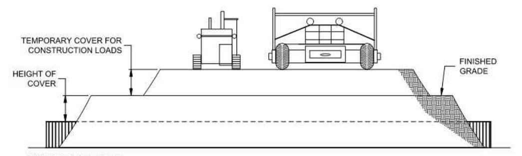

CONSTRUCTION LOADS

FOR TEMPORARY CONSTRUCTION VEHICLE LOADS, AN EXTRA AMOUNT OF COMPACTED COVER MAY BE REQUIRED OVER THE TOP OF THE PIPE. THE HEIGHT-OF-COVER SHALL MEET THE MINIMUM REQUIREMENTS SHOWN IN THE TABLE BELOW. THE USE OF HEAVY CONSTRUCTION EQUIPMENT NECESSITATES GREATER PROTECTION FOR THE PIPE THAN FINISHED GRADE COVER MINIMUMS FOR NORMAL HIGHWAY TRAFFIC.

PIPE SPAN, INCHES	AXLE LOADS (kips)			
	18-50	50-75	75-110	110-150
	MINIMUM COVER (FT)			
12-42	2.0	2.5	3.0	3.0
48-72	3.0	3.0	3.5	4.0
78-120	3.0	3.5	4.0	4.0
126-144	3.5	4.0	4.5	4.5

*MINIMUM COVER MAY VARY, DEPENDING ON LOCAL CONDITIONS. THE CONTRACTOR MUST PROVIDE THE ADDITIONAL COVER REQUIRED TO AVOID DAMAGE TO THE PIPE. MINIMUM COVER IS MEASURED FROM THE TOP OF THE PIPE TO THE TOP OF THE MAINTAINED CONSTRUCTION ROADWAY SURFACE.

CONSTRUCTION LOADING DIAGRAM
NOT TO SCALE

SPECIFICATION FOR CORRUGATED STEEL PIPE-ALUMINIZED TYPE 2 STEEL

SCOPE
THIS SPECIFICATION COVERS THE MANUFACTURE AND INSTALLATION OF THE CORRUGATED STEEL PIPE (CSP) DETAILED IN THE PROJECT PLANS.

MATERIAL
THE ALUMINIZED TYPE 2 STEEL COILS SHALL CONFORM TO THE APPLICABLE REQUIREMENTS OF AASHTO M274 OR ASTM A929.

PIPE
THE CSP SHALL BE MANUFACTURED IN ACCORDANCE WITH THE APPLICABLE REQUIREMENTS OF AASHTO M36 OR ASTM A760. THE PIPE SIZES, GAGES AND CORRUGATIONS SHALL BE AS SHOWN ON THE PROJECT PLANS.

ALL FABRICATION OF THE PRODUCT SHALL OCCUR WITHIN THE UNITED STATES.

HANDLING AND ASSEMBLY
SHALL BE IN ACCORDANCE WITH RECOMMENDATIONS OF THE NATIONAL CORRUGATED STEEL PIPE ASSOCIATION (NCSPA)

INSTALLATION
SHALL BE IN ACCORDANCE WITH AASHTO STANDARD SPECIFICATIONS FOR HIGHWAY BRIDGES, SECTION 26, DIVISION II OR ASTM A798 AND IN CONFORMANCE WITH THE PROJECT PLANS AND SPECIFICATIONS. IF THERE ARE ANY INCONSISTENCIES OR CONFLICTS THE CONTRACTOR SHOULD DISCUSS AND RESOLVE WITH THE SITE ENGINEER.

IT IS ALWAYS THE RESPONSIBILITY OF THE CONTRACTOR TO FOLLOW OSHA GUIDELINES FOR SAFE PRACTICES.

MATERIAL SPECIFICATION
NOT TO SCALE

ACCESS CASTING NOT SUPPLIED BY CONTECH

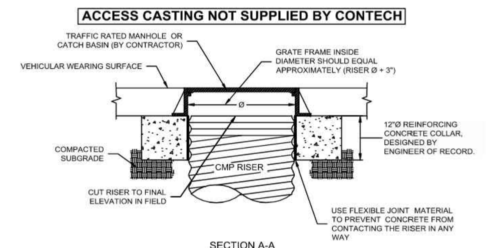

SECTION A-A

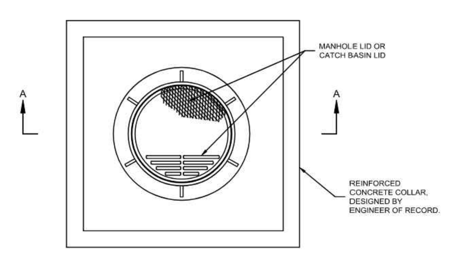

PLAN VIEW

NOTES:
1. REINFORCED CONCRETE COLLAR SHALL BE SIZED AND DESIGNED BY ENGINEER OF RECORD SO THAT THE LOADS ARE TRANSMITTED TO THE SOIL, AND NOT THE RISER.
2. REINFORCED CONCRETE COLLAR SHALL BE SIZED TO PROVIDE AN ADEQUATE BOTTOM AREA BASED ON THE ALLOWABLE BEARING CAPACITY OF THE SOIL.
3. THE FLEXIBLE JOINT MATERIAL (RECYCLED VINYL OR EQUIVALENT) TO BE STIFF ENOUGH SO THAT THE CONCRETE CAN NEVER ENGAGE WITH THE RISER CORRUGATIONS.

MANHOLE CAP DETAIL
NOT TO SCALE

DYO42620 Police Department Firing Range and EOC Facility
90" CMP Detention System
Orland Park, IL
DETENTION SYSTEM

PROJECT No.: 29250 | SEQ. No.: 42620 | DATE: 12/15/2023 | DESIGNED: DYO | DRAWN: DYO | CHECKED: DYO | APPROVED: DYO | SHEET NO.: 4

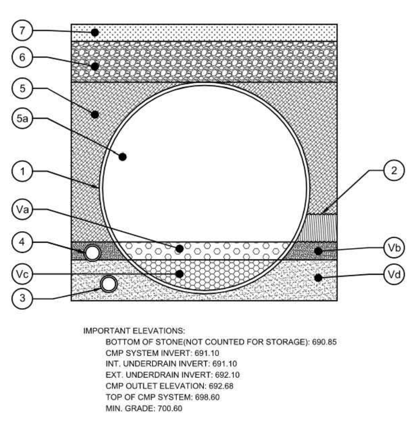

IMPORTANT ELEVATIONS:
BOTTOM OF STONE(NOT COUNTED FOR STORAGE): 690.85
CMP SYSTEM INVERT: 691.10
INT. UNDERDRAIN INVERT: 691.10
EXT. UNDERDRAIN INVERT: 692.10
CMP OUTLET ELEVATION: 692.68
TOP OF CMP SYSTEM: 698.60
MIN. GRADE: 700.60

1. CMP UNDERGROUND STORAGE
2. PRIMARY OUTLET FROM CMP
3. INTERIOR UNDERDRAIN - CONNECTED TO CMP MANIFOLD
4. EXTERNAL UNDERDRAIN - SET 1 FOOT FROM BOTTOM OF VOLUME CONTROL
5. RATE CONTROL - COARSE AGGREGATE ABOVE CMP OUTLET
5a. RATE CONTROL - PIPE STORAGE ABOVE CMP OUTLET
6. COARSE AGGREGATE - 12" FROM CROWN OF PIPE TO BOTTOM OF FLEXIBLE PAVEMENT, MINIMUM
7. PAVEMENT SECTION

MEDIA VOLUME DESCRIPTIONS:
Vc - VOLUME OF CMP STORAGE BELOW UNDERDRAIN INVERT.
Vd - VOLUME OF COARSE AGGREGATE BELOW UNDERDRAIN INVERT.
Va - VOLUME OF CMP STORAGE ABOVE UNDERDRAIN INVERT TO CMP OUTLET.
Vb - VOLUME OF COARSE AGGREGATE ABOVE UNDERDRAIN INVERT TO CMP OUTLET.

VOLUMES				
VOLUME TYPE	POROSITY	MEDIA VOLUME	STORAGE VOLUME	VOLUME PROVIDED
CMP STORAGE BELOW UD INV.	1	Vc	1.0 X Vc	1,815.7 CF
COARSE AGGREGATE BELOW UD INV.	0.36	Vd	0.36 X Vd	1,070.8 CF
CMP STORAGE ABOVE UNDERDRAIN INV.	1	Va	0.5 X Va	848.5 CF
COARSE AGGREGATE ABOVE UNDERDRAIN INV.	0.18	Vb	0.18 X Vb	194.6 CF
TOTAL VOLUME CONTROL				3,929.56 CF

MWRD VOLUME CALCULATIONS
N.T.S.

DYO42620 Police Department Firing Range and EOC Facility
90" CMP Detention System
Orland Park, IL
DETENTION SYSTEM

PROJECT No.: 29250 | SEQ. No.: 42620 | DATE: 12/15/2023 | DESIGNED: DYO | DRAWN: DYO | CHECKED: DYO | APPROVED: DYO | SHEET NO.: 5

NOTES
1. ALL WELDS CONTINUOUS, UNLESS OTHERWISE NOTED
2. MATERIALS:
   • (1) Ø5/8 - INCH AND (1) Ø9/16-INCH BUNA N, 50 DUROMETER O-RINGS

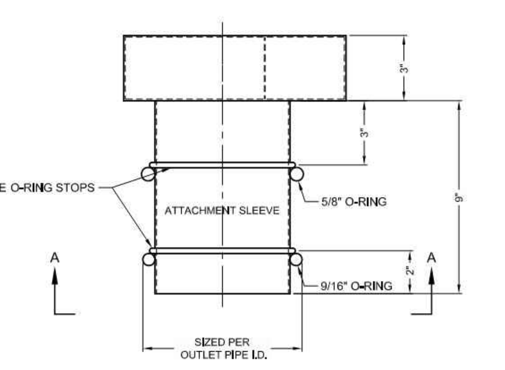

TOP VIEW

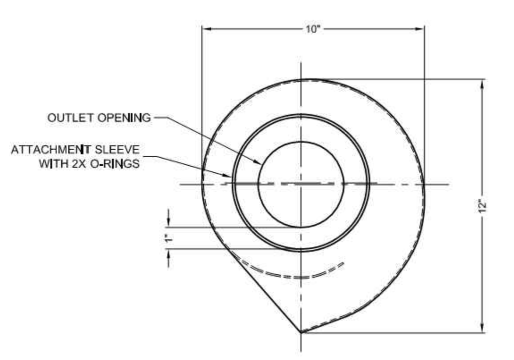

ELEVATION A-A VIEW

This CADD file is for the purpose of specifying stormwater flow control equipment to be furnished by Contech Construction Products and may only be transferred to other documents exactly as provided by Contech Construction Products. Title block information, excluding the Contech Construction Products logo and the Fluidic-Amp or Fluidic-Cone designation and patent number, may be deleted if necessary. Revisions to any part of this CADD file without prior coordination with Contech Construction Products shall be considered unauthorized use of proprietary information.

CONTECH ENGINEERED SOLUTIONS LLC — www.ContechES.com — 9025 Centre Pointe Dr., Suite 400, West Chester, OH 45069 — 800-338-1122 513-645-7000 513-645-7993 FAX

FLUIDIC-AMP VORTEX VALVE
MODEL FA1012 w/ SLEEVE ATTACHMENT

DATE: 07/16/15 | FILE NAME: FA1012-S VORTEX VALVE DETAIL WITH SLEEVE | DRAWN: DRA | CHECKED: —

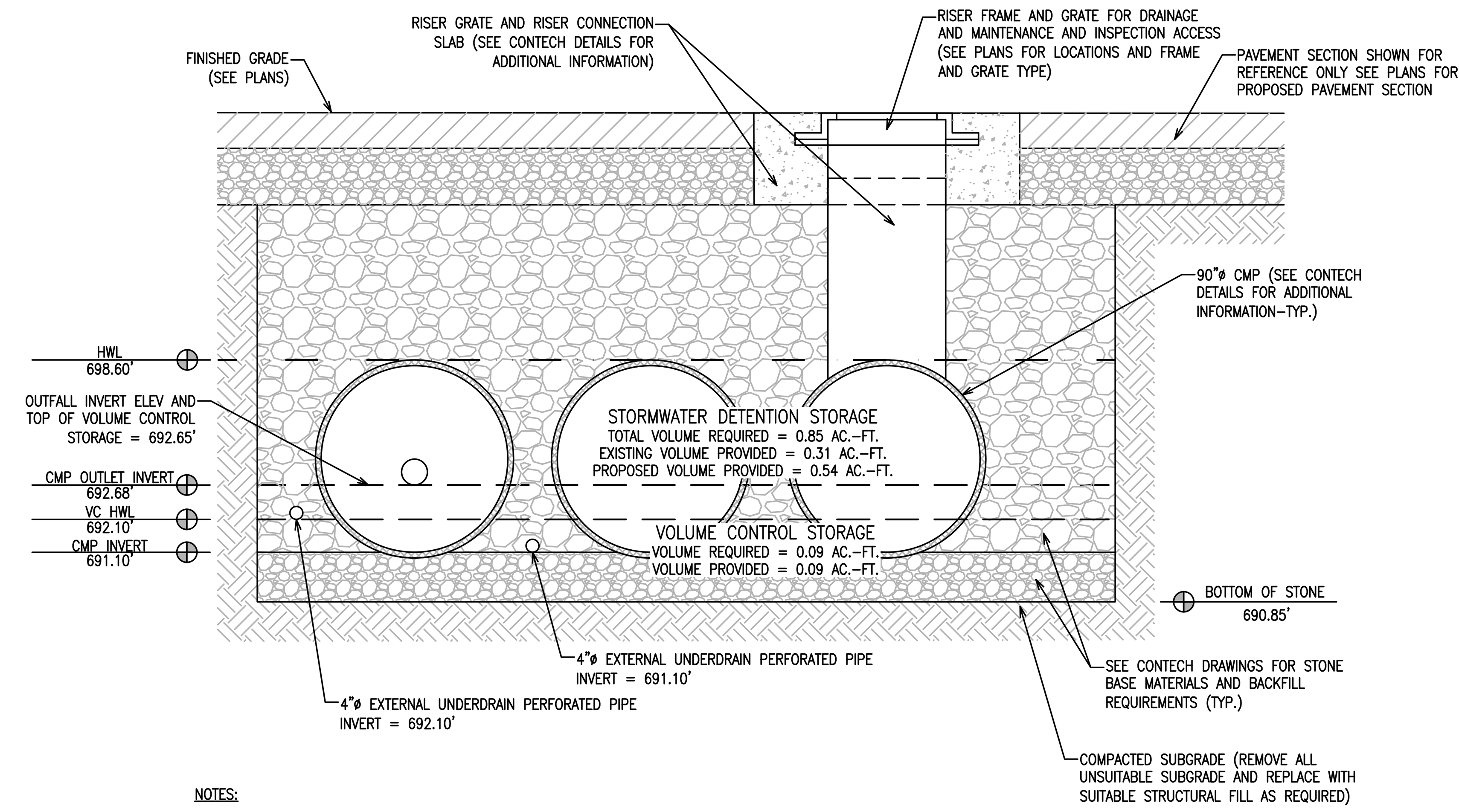

NOTES:
1. DRAWING PROVIDED FOR REFERENCE ONLY.
2. SEE CONTECH DETAILS FOR ADDITIONAL INFORMATION.

DETENTION AND VOLUME CONTROL SUMMARY

VOLUME TYPE	DEPTH	POROSITY	STORAGE VOLUME	DETENTION PROVIDED	VOLUME CONTROL PROVIDED
D_A: VAULT DETENTION STORAGE (I=692.68')	5.92'	1.00	1.00 X D_A	0.445 AC–FT	–
D_B: COARSE AGGREGATE DETENTION STORAGE (I=692.68')	5.92'	0.36	0.36 X D_B	0.074 AC–FT	–
V_A: VAULT STORAGE (BELOW THE OUTLET)	0.58'	1.00	0.50 X 1.00 X V_A	0.019 AC–FT	0.019 AC–FT
V_B: COARSE AGGREGATE (ABOVE THE U.D. INVERT)	0.58'	0.36	0.50 X 0.36 X V_B	0.004 AC–FT	0.004 AC–FT
V_C: VAULT STORAGE (BELOW THE U.D. INVERT) (I=691.10')	1.00'	1.00	1.00 X V_C	–	0.042 AC–FT
V_D: COARSE AGGREGATE (BELOW THE U.D. INVERT) (I=691.10')	1.00'	0.36	0.36 X V_D	–	0.025 AC–FT
			TOTAL	0.542 AC–FT	0.090 AC–FT

CONTECH CMP DETENTION SYSTEM
DETENTION AND VOLUME CONTROL FACILITY CROSS SECTION DETAIL

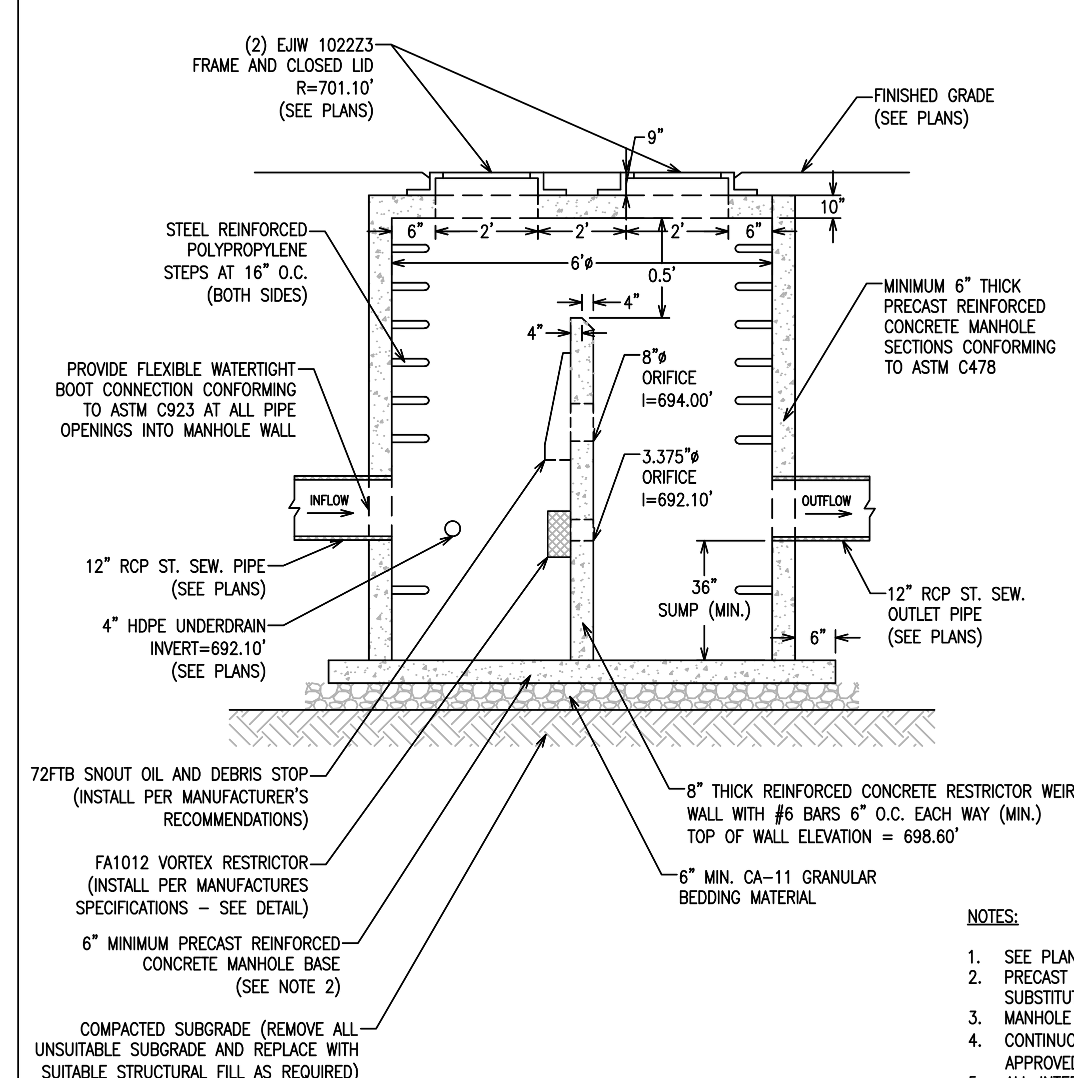

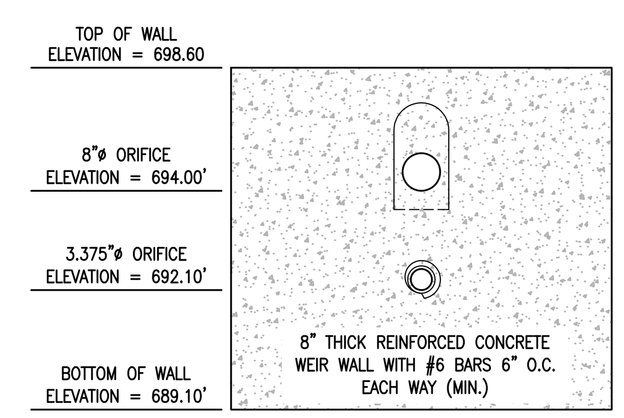

RESTRICTOR WEIR WALL

NOTES:
1. SEE PLANS FOR OUTLET CONTROL STRUCTURE LOCATION AND ORIENTATION.
2. PRECAST REINFORCED MONOLITHIC CONCRETE MANHOLE BOTTOM WITH INTEGRAL SIDEWALLS CAN BE SUBSTITUTED IN PLACE OF THE CONCRETE BOTTOM SLAB DESIGN SHOWN.
3. MANHOLE BARREL SECTIONS SHALL BE TONGUE AND GROOVE TYPE
4. CONTINUOUS LAYER OF NON–HARDENING, PREFORMED, BITUMINOUS, MASTIC MATERIAL (RAMNEK OR APPROVED EQUAL) SHALL BE APPLIED TO EACH MANHOLE JOINT TO PREVENT INFLOW.
5. ALL INTERIOR MANHOLE JOINTS SHALL BE MORTARED WITH HYDRAULIC CEMENT
6. FLAT–TOP REINFORCED CONCRETE SLAB SHALL BE DESIGNED FOR HS–20 TRAFFIC LOADING.
7. PRECAST CONCRETE ADJUSTING RINGS SHALL CONFORM TO ASTM C39 (COMPRESSIVE STRENGTH TEST). MAXIMUM ALLOWABLE HEIGHT FOR ADJUSTING RINGS SHALL BE 8".

RESTRICTOR CATCH BASIN #1 DETAIL

VILLAGE OF ORLAND PARK ILLINOIS

Village of Orland Park Illinois

POLICE DEPARTMENT FIRING RANGE AND EOC FACILITY

10609 163rd St. Orland Park, IL 60467

JACOB & HEFNER ASSOCIATES
1333 Butterfield Rd, Suite 300, Downers Grove, IL 60515
PHONE: (630) 652-4600, FAX: (630) 652-4601
www.jacobandhefner.com

PLANNING DIVISION APPROVED
Case No: 2023-0508
Date: 12/19/2023
W/Conditions: Yes
W/Out Conditions:
VILLAGE OF ORLAND PARK

ISSUE
ISSUED FOR REVIEW - 90%

REV	DATE	DESCRIPTION
3	01/16/24	ISSUED FOR REVIEW - 90%
2	12/01/23	ISSUED FOR REVIEW - 60%
1	10/18/23	ISSUED FOR REVIEW - 30%

KEY PLAN

N.T.S.

PROJECT NO.	H064
DESIGNED BY	–
DRAWN BY	–
CHECKED BY	–
APPROVED BY	–

SHEET TITLE
DETAILS

DATE: 01/16/24
REV. 3
SHEET NO. C8.1

Copyright © 2024 Jacob & Hefner Associates, INC.

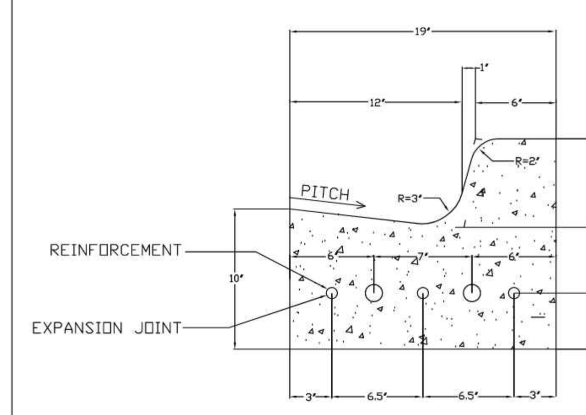

NOTES:
1. REINFORCEMENT SHALL BE THREE (3) #5 REINFORCING BARS CONTINUOUS BETWEEN EXPANSION EXPANSION JOINTS, WITH LOCATION SPACING AS INDICATED ABOVE.
2. EXPANSION JOINT: 3/4" THICK BITUMINOUS FILLER MATERIAL- PROVIDE TWO (2) #6 X 24" SMOOTH BARS WITH EXPANSION CAPS AT EACH EXPANSION JOINT. INSTALL AT ENDS OF ALL RADII AND NO FURTHER THAN SIXTY (60') FEET APART.
3. SAW THREE (3) EQUALLY SPACED CONTRACTION JOINTS AT TWENTY (20') FEET INTERVALS BETWEEN EXPANSION JOINTS. CONTRACTION JOINTS SHALL BE SAW-CUT IN THE UPPER ONE-THIRD OF CURB AND GUTTER WITHIN 3 DAYS OF PLACEMENT.
4. COST OF BARS SHALL BE INCLUDED IN THE UNIT PRICE (PER LINEAL FOOT) FOR CURB AND GUTTER.

B – 6.12 CURB AND GUTTER
B-612.DWG | DRAWN BY: | STREET & PAVEMENT | DATE: | REVISED: | REVISED: 2-14-08 rjr | REVISED: 2-6-08 KTL
Village of ORLAND PARK
Engineering Department | DRAWING NO. STR-04

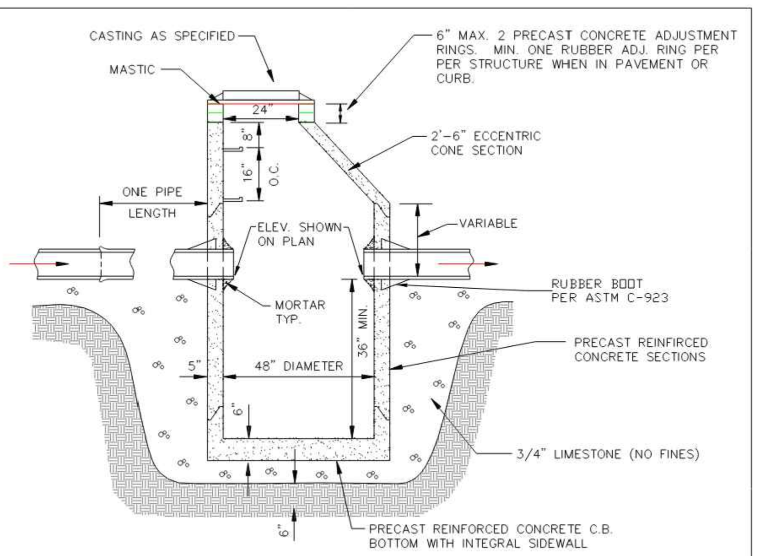

NOTES:
1. Adjustment: Any structure located within pavement shall require the use of at least one (1) rubber adjustment riser, Infra-Riser brand or approved equal, and, if necessary, said riser shall be of the tapered type in order to match the proposed grade of the roadway. No more than two (2) precast concrete adjusting rings with six (6) inch maximum height adjustment shall be allowed. Adjustments within pavement that are less than three (3) inches in height shall consist of only rubber adjustment riser(s). The minimum thickness of a rubber adjustment riser shall be one (1) inch. Adjustments within pavement greater than three (3) inches in height shall use a minimum three (3) inch precast concrete riser for the lower riser, and the final riser shall be of the rubber type.
2. Pipe and frame seals: All pipe connection openings shall be precast with resilient rubber water tight pipe to manhole sleeves or seals conforming to ASTM C-923. Adapter chimney seal with twelve (12) inch sleeve type shall extend from the manhole cone to the manhole frame for all structures in the right-of-way.
3. Sealing: All mating surfaces of adjustment riser(s), structure sections, and frames shall be sealed with a mastic sealant. No concrete mortar or epoxy shall be allowed as a sealant for adjustment risers, structure sections or frames. If multiple adjustment risers are required, a continuous application of sealant shall be applied between each unit.
4. All bottom sections shall be monolithically precast including bases and invert flowlines.
5. Provide CA-6 aggregate backfill around catch basin to subgrade elevation in paved areas.for subgrade.

CATCHBASIN TYPE A
CBASIN_A.DWG | DRAWN BY: | STORM SEWER IMPROVEMENT | DATE: | REVISED: | REVISED: | REVISED: wdc 01-05-12
Village of ORLAND PARK
Engineering Department | DRAWING NO. STS-02

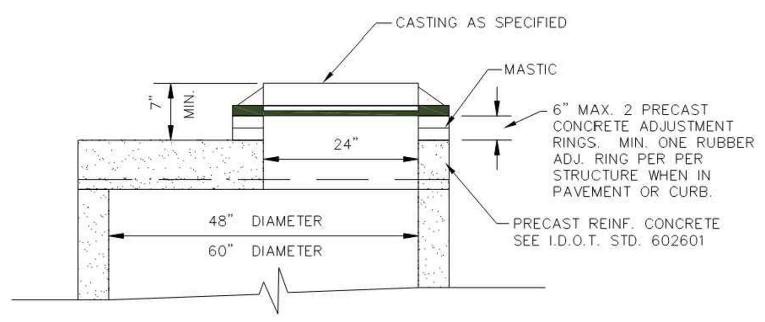

NOTES:
1. Adjustment: Any structure located within pavement shall require the use of at least one (1) rubber adjustment riser, Infra-Riser brand or approved equal, and, if necessary, said riser shall be of the tapered type in order to match the proposed grade of the roadway. No more than two (2) precast concrete adjusting rings with six (6) inch maximum height adjustment shall be allowed. Adjustments within pavement that are less than three (3) inches in height shall consist of only rubber adjustment riser(s). The minimum thickness of a rubber adjustment riser shall be one (1) inch. Adjustments within pavement greater than three (3) inches in height shall use a minimum three (3) inch precast concrete riser for the lower riser, and the final riser shall be of the rubber type.
2. Sealing: All non-rubber mating surfaces, exterior joints of frames, adjustment riser(s), flat slab top or cone section (if applicable) and structure section shall be sealed with a uniform application of bituminous mastic sealant. The mating surfaces of all rubber adjustment risers shall be sealed with the manufacturer's recommended sealant for rubber adjustment risers. If multiple adjustment risers are required, a continuous application of sealant shall be applied between each unit. Interior surfaces shall be sealed with concrete mortar or epoxy mortar. Concrete mortar or epoxy mortar will not be used on mating surfaces as a sealant between adjustment risers, structure sections or frames.

FLAT SLAB TOP
FLTSLAB.DWG | DRAWN BY: | STORM SEWER IMPROVEMENT | DATE: | REVISED: | REVISED: | REVISED: wdc 01-05-12
Village of ORLAND PARK
Engineering Department | DRAWING NO. STS-06

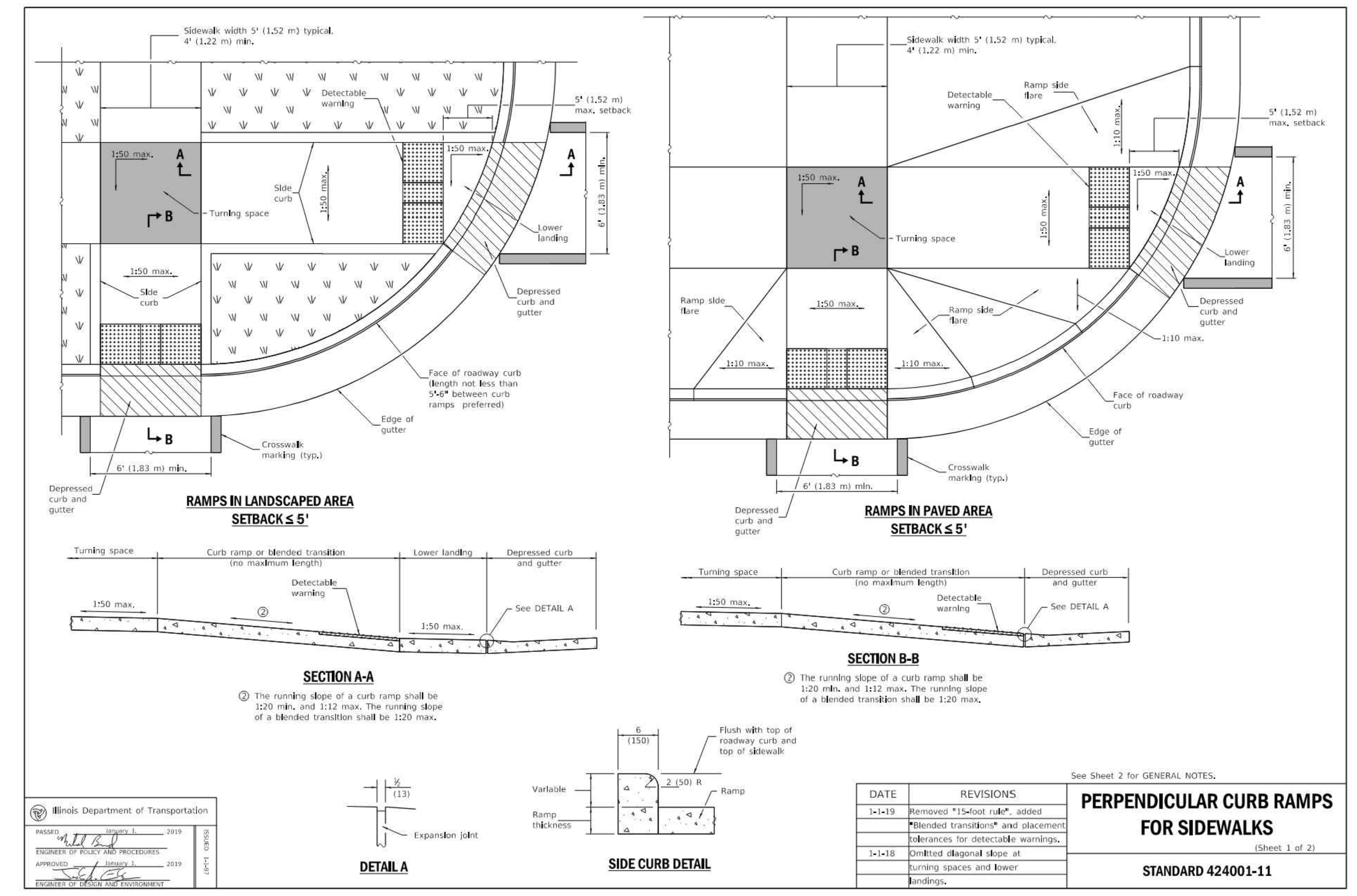

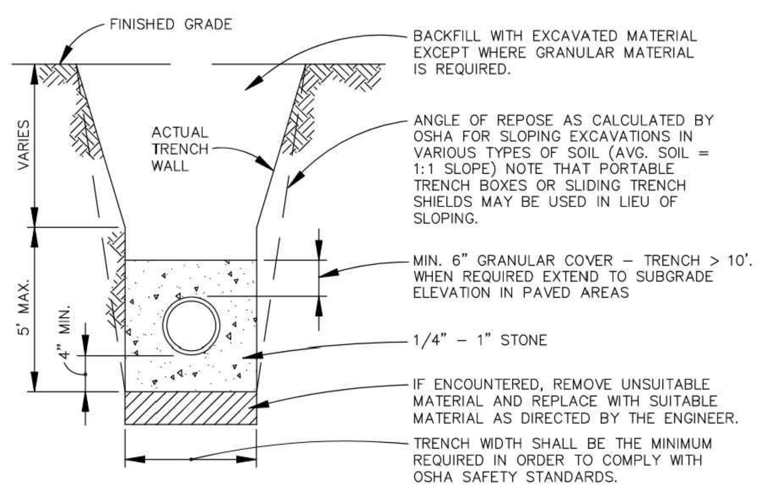

PVC WHEN USED AS SANITARY SEWER SHALL REQUIRE GRANULAR BEDDING AND COVER AS DETAILED.
DIP WHEN USED AS SANITARY SEWER SHALL REQUIRE GRANULAR TO TOP OF PIPE.

TRENCH SECTION SANITARY SEWER
SANTRENCH.DWG | DRAWN BY: | SANITARY SEWER IMPROVEMENT | DATE: | REVISED: | REVISED: | REVISED:
Village of ORLAND PARK
Engineering Department | DRAWING NO. SS-06

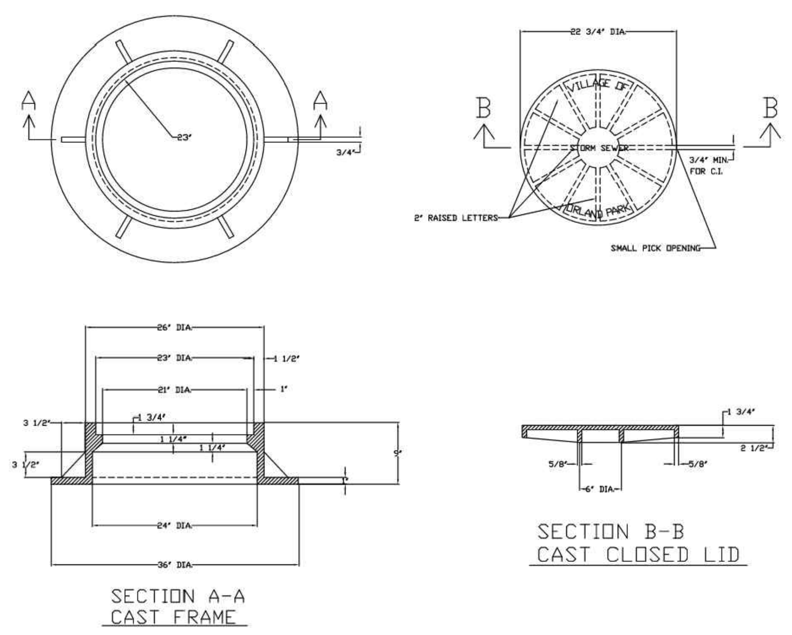

NOTES:
1. DUCTILE IRON CASTINGS SHALL BE GRADE 60-40-18 AND SHALL BE TESTED IN ACCORDANCE WITH FEDERAL SPECIFICATIONS.
2. ALL LIDS AND COVERS SHALL BE MACHINED.
3. THE MANHOLE COVERS SHALL HAVE RAISED LETTERS AS SHOWN.
4. ALTERNATIVE TO DUCTILE IRON LID, GRAY IRON LID MAY BE USED.
5. MINIMUM WEIGHTS FOR CASTINGS AS SHOWN.
6. CASTINGS SHALL BE EAST JORDAN IRON WORKS 1050Z1 FRAME AND 1020A OR 1020M1 COVER OR APPROVED EQUAL.

STORM SEWER FRAME & COVER
FRAME_CO.DWG | DRAWN BY: | STORM SEWER IMPROVEMENT | DATE: | REVISED: KTL 6-12-13 | REVISED: | REVISED:
Village of ORLAND PARK
Engineering Department | DRAWING NO. STS-14

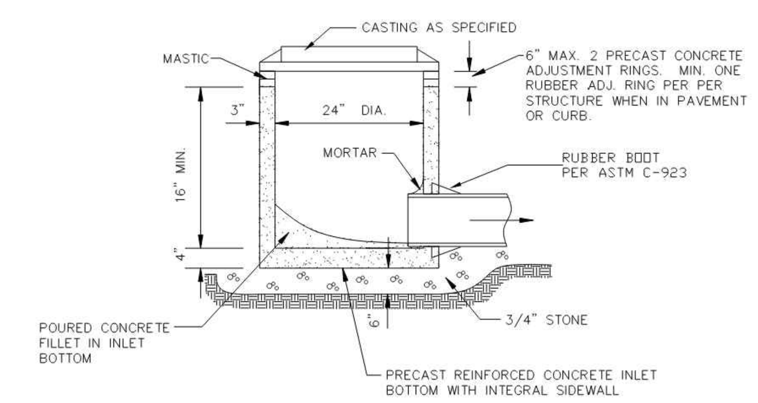

NOTES:
1. Adjustment: Any structure located within pavement shall require the use of at least one (1) rubber adjustment riser, Infra-Riser brand or approved equal, and, if necessary, said riser shall be of the tapered type in order to match the proposed grade of the roadway. No more than two (2) precast concrete adjusting rings with six (6) inch maximum height adjustment shall be allowed. Adjustments within pavement that are less than three (3) inches in height shall consist of only rubber adjustment riser(s). The minimum thickness of a rubber adjustment riser shall be one (1) inch. Adjustments within pavement greater than three (3) inches in height shall use a minimum three (3) inch precast concrete riser for the lower riser, and the final riser shall be of the rubber type.
2. Pipe and frame seals: All pipe connection openings shall be precast with resilient rubber water tight pipe to manhole sleeves or seals conforming to ASTM C-923. Adapter chimney seal with twelve (12) inch sleeve type shall extend from the manhole cone to the manhole frame for all structures in the right-of-way.
3. Sealing: All non-rubber mating surfaces, exterior joints of frames, adjustment riser(s), flat slab top or cone section (if applicable) and structure section shall be sealed with a uniform application of bituminous mastic sealant. The mating surfaces of all rubber Adjustment risers shall be sealed with the manufacturer's recommended sealant for rubber adjustment risers. If multiple adjustment risers are required, a continuous application of sealant shall be applied between each unit. Interior surfaces shall be sealed with concrete mortar or epoxy mortar. Concrete mortar or epoxy mortar will not be used on mating surfaces as a sealant between adjustment risers, structure sections or frames
4. All bottom sections shall be monolithically precast including bases and invert flowlines.
5. Provide CA-6 aggregate backfill around inlet to subgrade elevation in paved areas.for subgrade.

INLET TYPE A
INLET_A.DWG | DRAWN BY: | STORM SEWER IMPROVEMENT | DATE: | REVISED: | REVISED: | REVISED: wdc 01-05-12
Village of ORLAND PARK
Engineering Department | DRAWING NO. STS-05

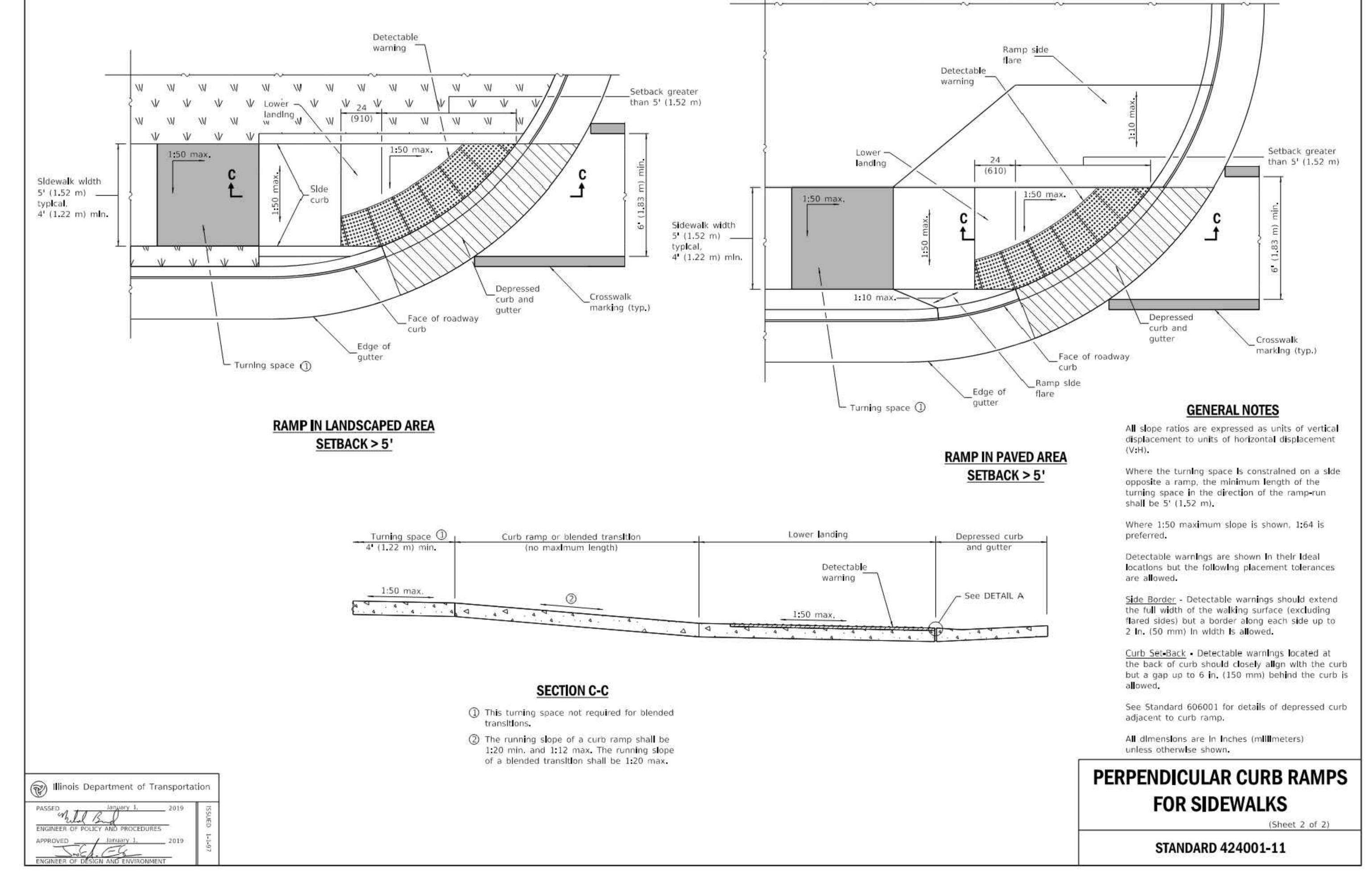

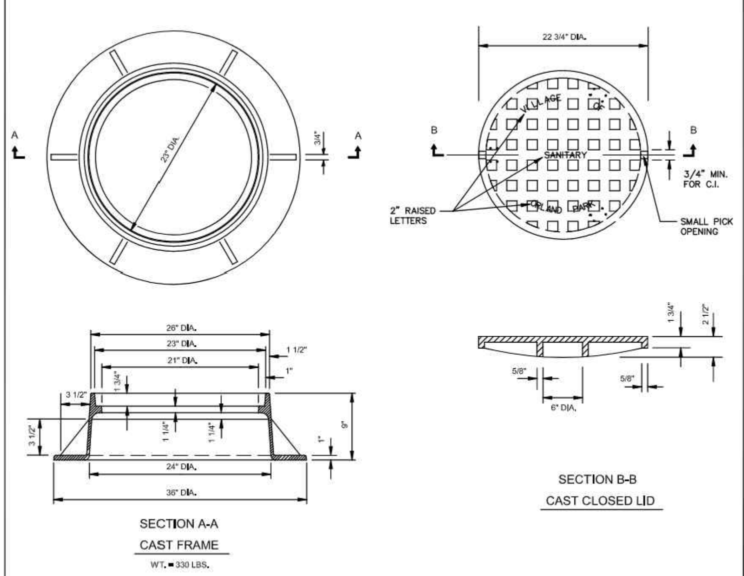

1. DUCTILE IRON CASTINGS SHALL BE GRADE 60-40-18 & SHALL BE TESTED IN ACCORDANCE WITH FEDERAL SPECIFICATIONS.
2. CASTINGS SHALL BE EAST JORDAN IRON WORKS 1022Z1 FRAME AND 1020A HD GS COVER.

SANITARY MANHOLE FRAME & COVER
MANHLFRM.DWG | DRAWN BY: WDC | SANITARY SEWER IMPROVEMENT | DATE: 7/13/2006 | REVISED: 1/3/2017 KTL | REVISED: | REVISED:
Village of ORLAND PARK
Public Works Department | DRAWING NO. SS-04

D_1 (inches)	D_2 (inches)
8	8
10	8
12	8
15	10
18	12
21	15
24	18

For D_2=8" use 8" L.R. elbow

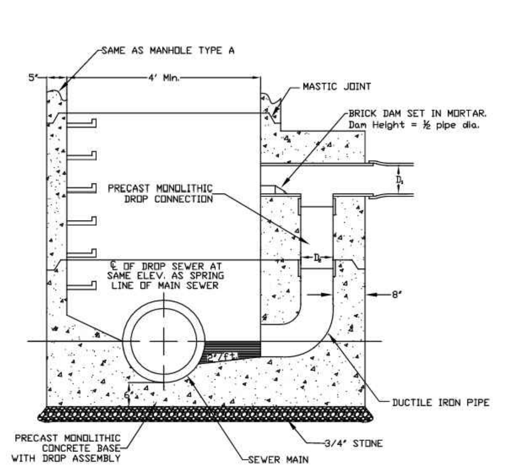

Note: Minimum allowed depth of drop manholeis 6 ft. Depth is measured from invert of incoming pipe to invert of receiving main pipe

DROP MANHOLE PROPOSED
DROPMH SS-02.DWG | DRAWN BY: KTL | SANITARY SEWER IMPROVEMENT | DATE: 1-25-13 | REVISED: 1-25-13 KTL | REVISED: | REVISED:
Village of ORLAND PARK
Public Works Department | DRAWING NO. SS-02

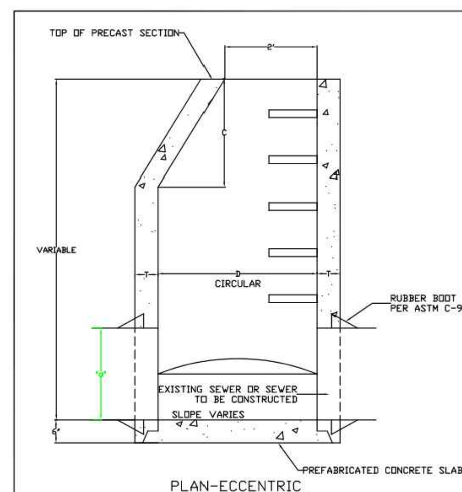

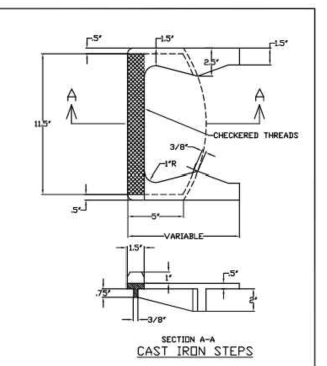

MANHOLE DIAMETERS:

D:	d
48"	≤ 15"
60"	21" to 36"
72"	> 36"

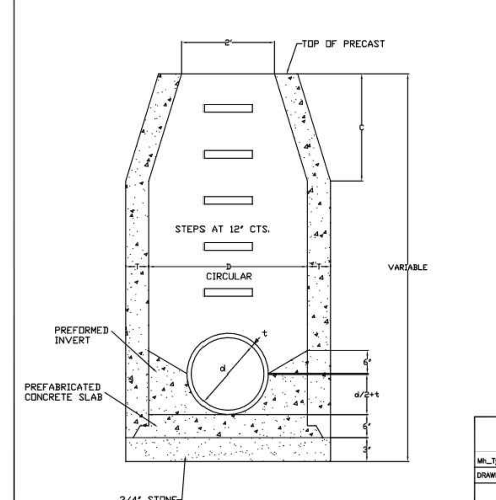

NOTES:
DIMENSION "C" FOR PRECAST REINFORCED CONCRETE SECTIONS MAY VARY FROM THE DIMENSION GIVEN TO PLUS 6 INCHES.
THE CAST IRON STEOPS AS DETAILED HEREON ARE TYPICAL. STEPS OF OTHER DESIGN AND MATERIAL THAT WILL CONFORM TO THE MINIMUM REQUIREMENTS OF THE STEPS SHOWN MAY BE USED WHEN APPROVED BY THE DIRECTOR OF PUBLIC WORKS & ENGINEERING.
CAST IRON STEPS SHALL BE GRAY IRON CONFORMING TO THE REQUIREMENTS OF ART. 710.17 OF THE STANDARD SPECIFICATIONS.
STEPS SHALL BE EMBEDDED INTO THE WALL A MINIMUM OF 3 INCHES. STEPS SHALL NOT BE EXTENDED ON THE OUTSIDE.
NO MORE THAN 2 ADJUSTMENT RINGS WITH A MAXIMUM OF 6 INCHES IS ALLOWED. SPECIFIC REQUIREMENTS FOR FINE ADJUSTMENT ARE PER LAND DEVELOPMENT CODE SECTION 6-408

MANHOLE TYPE A
Mh_TypeA.dwg | DRAWN BY: KTL | SANITARY SEWER IMPROVEMENT | DATE: 11-28-11 | REVISED: 01-03-17 | REVISED: | REVISED:
Village of ORLAND PARK
Public Works Department | DRAWING NO. SS-01

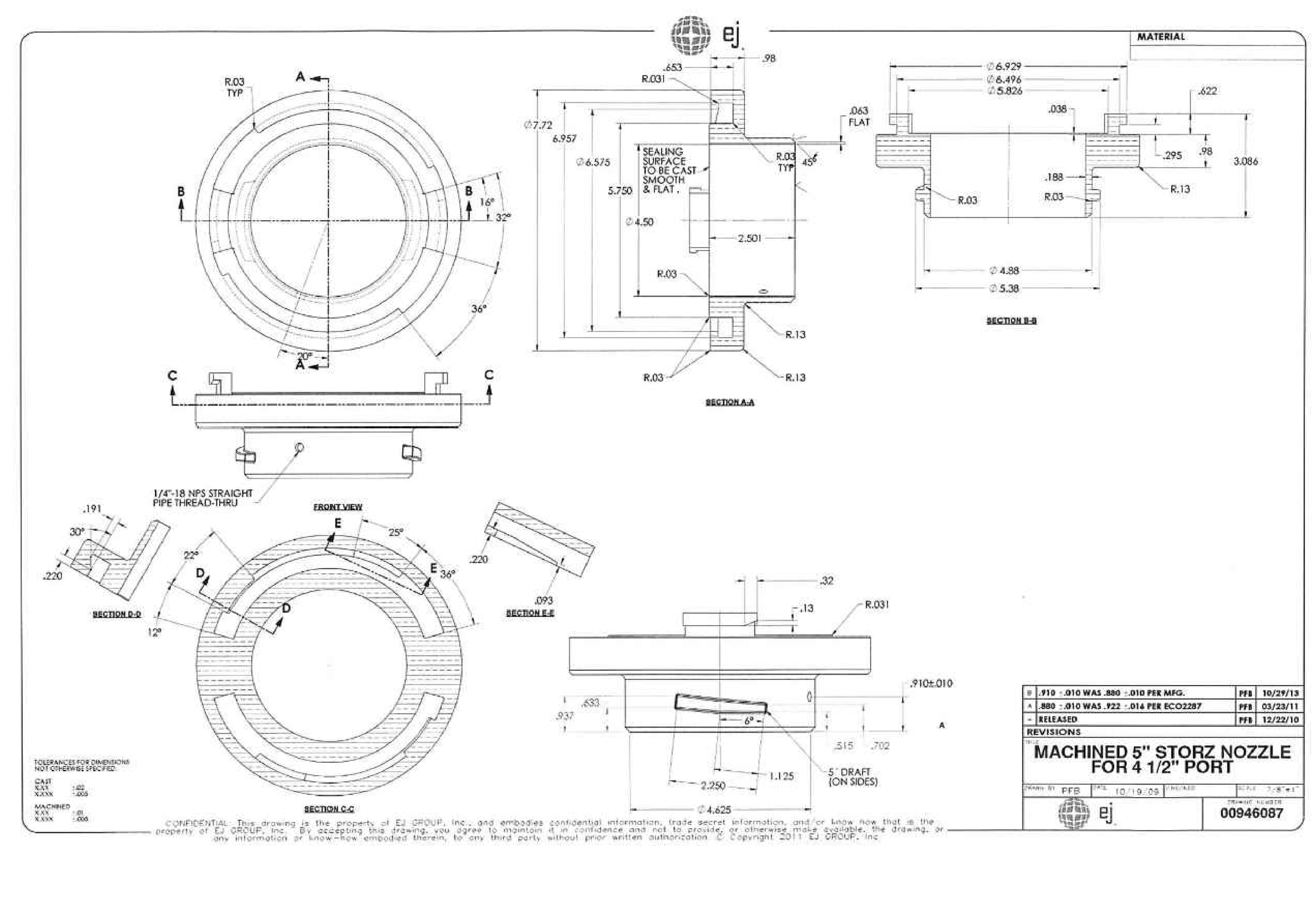

VILLAGE OF ORLAND PARK ILLINOIS

Village of Orland Park Illinois

POLICE DEPARTMENT FIRING RANGE AND EOC FACILITY

10609 163rd St. Orland Park, IL 60467

JACOB & HEFNER ASSOCIATES
1333 Butterfield Rd, Suite 300, Downers Grove, IL 60515
PHONE: (630) 652-4600, FAX: (630) 652-4601
www.jacobandhefner.com

PLANNING DIVISION APPROVED
Case No: 2023-0508
Date: 12/19/2023
W/Conditions: Yes
W/Out Conditions:
VILLAGE OF ORLAND PARK

ISSUE
ISSUED FOR REVIEW - 90%

REV	DATE	DESCRIPTION
3	01/16/24	ISSUED FOR REVIEW - 90%
2	12/01/23	ISSUED FOR REVIEW - 60%
1	10/18/23	ISSUED FOR REVIEW - 30%

KEY PLAN

N.T.S.

PROJECT NO.	H064
DESIGNED BY	--
DRAWN BY	--
CHECKED BY	--
APPROVED BY	--

SHEET TITLE
DETAILS

DATE: 01/16/24
REV. 3
SHEET NO. C8.2

Copyright © 2024 Jacob & Hefner Associates, INC.

GENERAL NOTES

1. ALL PAVING AND RELATED CONSTRUCTION SHALL CONFORM TO THE STANDARD SPECIFICATIONS FOR ROAD AND BRIDGE CONSTRUCTION, LATEST EDITION BY ILLINOIS DEPARTMENT OF TRANSPORTATION AND ALL AMENDMENTS THERETO AND IN ACCORDANCE WITH THE LATEST EDITION OF THE SUBDIVISION REGULATIONS OF THE MUNICIPALITY. IN CASE OF CONFLICT, THE MORE STRINGENT CODE SHALL TAKE PRECEDENCE.

2. ALL STORM SEWER, SANITARY SEWER AND WATER MAIN CONSTRUCTION SHALL CONFORM TO THE STANDARD SPECIFICATIONS FOR WATER AND SEWER MAIN CONSTRUCTION IN ILLINOIS, LATEST EDITION, AND IN ACCORDANCE WITH THE CURRENT SUBDIVISION REGULATIONS OF THE MUNICIPALITY UNLESS OTHERWISE NOTED ON THE PLANS.

3. STANDARD SPECIFICATIONS, SUPPLEMENTAL SPECIFICATIONS AND RECURRING SPECIAL PROVISIONS, CONSTRUCTION PLANS, AND SUBSEQUENT DETAILS ARE ALL TO BE CONSIDERED AS PART OF THE CONTRACT. INCIDENTAL ITEMS OR ACCESSORIES NECESSARY TO COMPLETE THIS WORK MAY NOT BE SPECIFICALLY NOTED BUT ARE CONSIDERED A PART OF THIS CONTRACT.

4. THE CONTRACTOR SHALL BE RESPONSIBLE FOR HAVING THE UTILITY COMPANIES LOCATE THEIR FACILITIES IN THE FIELD PRIOR TO CONSTRUCTION AND SHALL ALSO BE RESPONSIBLE FOR THE MAINTENANCE AND PRESERVATION OF THESE FACILITIES. THE ENGINEER DOES NOT WARRANT THE LOCATION OF ANY EXISTING UTILITIES SHOWN ON THE PLAN. THE CONTRACTOR SHALL CALL J.U.L.I.E. AT 1-800-892-0123, AND THE MUNICIPALITY FOR UTILITY LOCATIONS.

5. NO CONSTRUCTION PLAN SHALL BE USED FOR CONSTRUCTION UNLESS SPECIFICALLY MARKED "FOR CONSTRUCTION." PRIOR TO COMMENCEMENT OF CONSTRUCTION THE CONTRACTOR SHALL VERIFY ALL DIMENSIONS AND CONDITIONS AFFECTING THE WORK WITH THE ACTUAL CONDITIONS AT THE JOB SITE. IN ADDITION, THE CONTRACTOR MUST VERIFY THE ENGINEER'S LINE AND GRADE STAKES. IF THERE ARE ANY DISCREPANCIES WITH WHAT IS SHOWN ON THE CONSTRUCTION PLANS, HE MUST IMMEDIATELY REPORT SAME TO ENGINEER BEFORE DOING ANY WORK, OTHERWISE THE CONTRACTOR ASSUMES FULL RESPONSIBILITY. IN THE EVENT OF DISAGREEMENT BETWEEN THE CONSTRUCTION PLANS, SPECIFICATIONS AND/OR SPECIAL DETAILS, THE CONTRACTOR SHALL SECURE WRITTEN INSTRUCTION FROM THE ENGINEER PRIOR TO PROCEEDING WITH ANY PART OF THE WORK AFFECTED BY OMISSIONS OR DISCREPANCIES. FAILING TO SECURE SUCH INSTRUCTION, THE CONTRACTOR WILL BE CONSIDERED TO HAVE PROCEEDED AT HIS OWN RISK AND EXPENSE. IN THE EVENT OF ANY DOUBT OR QUESTIONS ARISING WITH RESPECT TO THE TRUE MEANING OF THE CONSTRUCTION PLANS OR SPECIFICATIONS, THE DECISION OF THE ENGINEER SHALL BE FINAL AND CONCLUSIVE.

6. NOTIFICATION OF COMMENCING CONSTRUCTION

   6.1. THE CONTRACTOR SHALL NOTIFY THE OWNER AND/OR HIS REPRESENTATIVE AND THE AFFECTED GOVERNMENTAL AGENCIES IN WRITING AT LEAST THREE FULL WORKING DAYS PRIOR TO COMMENCEMENT OF CONSTRUCTION. IN ADDITION, THE CONTRACTOR SHALL NOTIFY AS NECESSARY, ALL TESTING AGENCIES, EITHER MUNICIPALITY'S OR THE OWNER'S, SUFFICIENTLY IN ADVANCE OF CONSTRUCTION. A PRE-CONSTRUCTION CONFERENCE SHALL BE HELD WITH THE VILLAGE AND ENGINEER PRIOR TO THE START OF CONSTRUCTION.

   6.2. FAILURE OF CONTRACTOR TO ALLOW PROPER NOTIFICATION TIME WHICH RESULTS IN TESTING COMPANIES TO BE UNABLE TO VISIT SITE AND PERFORM TESTING WILL CAUSE CONTRACTOR TO SUSPEND OPERATION (PERTAINING TO TESTING) UNTIL TESTING AGENCY CAN SCHEDULE TESTING OPERATIONS. COST OF SUSPENSION OF WORK TO BE BORNE BY CONTRACTOR.

7. ALL CONTRACTORS SHALL KEEP ACCESS AVAILABLE AT ALL TIMES FOR ALL TYPES OF TRAFFIC. AT NO TIME SHALL ACCESS BE DENIED TO PROPERTIES SURROUNDING THE SITE.

8. ALL PROPOSED ELEVATIONS SHOWN ON THE PLANS ARE FINISHED SURFACE ELEVATIONS, UNLESS OTHERWISE SPECIFIED.

9. THE CONTRACTOR SHALL PRESERVE ALL CONSTRUCTION STAKES UNTIL THEY ARE NO LONGER NEEDED. ANY STAKES DESTROYED OR DISTURBED BY THE CONTRACTOR PRIOR TO THEIR USE SHALL BE RESET AT CONTRACTOR'S COST.

10. ALL FRAMES AND LIDS FOR STORM AND SANITARY SEWER STRUCTURES ARE TO BE ADJUSTED TO MEET FINAL FINISH GRADE. THIS ADJUSTMENT IS TO BE MADE BY THE SEWER CONTRACTOR AND THE COST IS TO BE CONSIDERED INCIDENTAL. THESE ADJUSTMENTS TO FINISHED GRADE WILL NOT ALLEVIATE THE CONTRACTOR FROM ANY ADDITIONAL ADJUSTMENTS AS REQUIRED BY THE VILLAGE UPON FINAL INSPECTION OF THE PROJECT. FINAL GRADES TO BE DETERMINED BY THE VILLAGE AT THE TIME OF FINAL INSPECTION AND MAY VARY FROM PLAN GRADE.

11. ANY EXISTING SIGNS, LIGHT STANDARDS AND UTILITY POLES WHICH INTERFERE WITH CONSTRUCTION OPERATIONS AND NOT NOTED FOR DISPOSAL SHALL BE REMOVED AND RESET BY THE CONTRACTOR AT HIS OWN EXPENSE AS DIRECTED BY THE ENGINEER. ANY DAMAGE TO THESE ITEMS SHALL BE REPAIRED OR REPLACED BY THE CONTRACTOR AT HIS OWN EXPENSE TO THE SATISFACTION OF THE OWNER. ANY SIGNS NOT REQUIRED TO BE RESET, SHALL BE DELIVERED TO THE RESPECTIVE OWNERS.

12. REMOVAL OF SPECIFIED ITEMS, INCLUDING BUT NOT LIMITED TO, PAVEMENT, SIDEWALK, CURB, CURB AND GUTTER, CULVERTS, ETC. SHALL BE DISPOSED OF OFF-SITE BY THE CONTRACTOR AT HIS OWN EXPENSE. HE IS RESPONSIBLE FOR ANY PERMIT REQUIRED FOR SUCH DISPOSAL.

13. ALL FIELD TILE ENCOUNTERED DURING CONSTRUCTION OPERATIONS SHALL BE CONNECTED TO THE PROPOSED STORM SEWER SYSTEM OR SHALL BE RESTORED TO PROPER OPERATING CONDITION. A RECORD OF THE LOCATION OF ALL FIELD TILE OR DRAIN PIPE ENCOUNTERED SHALL BE KEPT BY THE CONTRACTOR AND TURNED OVER TO THE ENGINEER UPON COMPLETION OF THE PROJECT. THE COST OF THIS WORK SHALL BE CONSIDERED INCIDENTAL TO THE CONTRACT AND NO ADDITIONAL COMPENSATION WILL BE ALLOWED BY THE OWNER AND/OR PROJECT GOVERNING AUTHORITY.

14. ALL WORK PERFORMED UNDER THIS CONTRACT SHALL BE GUARANTEED BY THE CONTRACTOR AND HIS SURETY FOR A PERIOD OF 12 MONTHS FROM THE DATE OF FINAL ACCEPTANCE OF THE PROJECT. THE CONTRACTOR SHALL BE HELD RESPONSIBLE FOR ALL DEFECTS IN MATERIALS AND WORKMANSHIP OF WHATEVER NATURE DURING THAT PERIOD.

15. BEFORE ACCEPTANCE BY THE OWNER AND FINAL PAYMENT, ALL WORK SHALL BE INSPECTED BY THE OWNER OR HIS REPRESENTATIVE. FINAL PAYMENT WILL BE MADE AFTER ALL THE CONTRACTOR'S WORK HAS BEEN APPROVED AND ACCEPTED BY THE OWNER AND MUNICIPALITY.

16. UPON AWARDING OF THE CONTRACT AND WHEN REQUIRED BY THE MUNICIPALITY, THE CONTRACTOR SHALL FURNISH A LABOR, MATERIAL AND PERFORMANCE BOND AND INSURANCE IN THE AMOUNT REQUIRED BY THE MUNICIPALITY GUARANTEEING COMPLETION OF THE WORK. THE UNDERWRITER SHALL BE ACCEPTABLE TO THE MUNICIPALITY.

17. EASEMENTS FOR THE EXISTING UTILITIES, BOTH PUBLIC AND PRIVATE, AND UTILITIES WITHIN PUBLIC RIGHTS-OF-WAY ARE SHOWN ON THE PLANS ACCORDING TO KNOWN AVAILABLE RECORDS. THE CONTRACTOR SHALL BE RESPONSIBLE FOR DETERMINING THE EXACT LOCATION IN THE FIELD OF THESE UTILITY LINES AND THEIR PROTECTION FROM DAMAGE DUE TO CONSTRUCTION OPERATIONS. IF EXISTING UTILITY LINES OF ANY NATURE ARE ENCOUNTERED WHICH CONFLICT WITH LOCATIONS OF THE NEW CONSTRUCTION, JACOB AND HEFNER ASSOCIATES, INC. IS RESPONSIBLE TO RESOLVE THE CONFLICT. JACOB AND HEFNER ASSOCIATES, INC. IS NOT RESPONSIBLE FOR THE COST OF CONSTRUCTION.

18. OWNER SHALL OBTAIN EASEMENTS AND PERMITS NECESSARY TO FACILITATE CONSTRUCTION OF THE PROPOSED UTILITIES. THE CONTRACTOR, HOWEVER, SHALL FURNISH ALL REQUIRED BONDS AND EVIDENCE OF INSURANCE NECESSARY TO SECURE THESE PERMITS.

19. THE CONTRACTORS SHALL PLAN THEIR WORK BASED ON THEIR OWN BORINGS, EXPLORATIONS AND OBSERVATIONS TO DETERMINE SOIL CONDITIONS AT THE LOCATION OF THE PROPOSED WORK.

20. THE CONTRACTOR IS SOLELY RESPONSIBLE FOR SAFETY ON THE JOB IN ACCORDANCE WITH OSHA REGULATIONS.

21. THE CONTRACTOR SHALL COLLECT AND REMOVE ALL CONSTRUCTION DEBRIS, EXCESS MATERIALS, TRASH, OIL AND GREASE RESIDUE, MACHINERY, TOOLS, STAKES OR LATH SET BY SURVEYORS FOR CONSTRUCTION, AND OTHER MISCELLANEOUS ITEMS WHICH WERE NOT PRESENT PRIOR TO PROJECT COMMENCEMENT AT NO ADDITIONAL EXPENSE TO THE OWNER. THE CONTRACTOR SHALL BE RESPONSIBLE FOR ACQUIRING ANY AND ALL PERMITS NECESSARY FOR THE HAULING AND DISPOSAL REQUIRED FOR CLEAN-UP AS DIRECTED BY THE ENGINEER OR OWNER. BURNING ON THE SITE IS NOT PERMITTED.

22. IT SHALL BE THE CONTRACTOR'S SOLE RESPONSIBILITY TO PROVIDE PROPER BARRICADING, WARNING DEVICES AND THE SAFE MANAGEMENT OF TRAFFIC AND PEDESTRIANS WITHIN THE AREA OF CONSTRUCTION. ALL SUCH DEVICES AND THEIR INSTALLATION SHALL CONFORM TO THE ILLINOIS MANUAL OF UNIFORM TRAFFIC CONTROL DEVICES FOR STREET AND HIGHWAYS, LATEST EDITION AND IN CONFORMANCE WITH REGULATIONS OF THE MUNICIPALITY OR D.O.T.

23. NO UNDERGROUND WORK SHALL BE COVERED UNTIL IT HAS BEEN APPROVED BY THE VILLAGE. APPROVAL TO PROCEED MUST BE OBTAINED FROM THE VILLAGE PRIOR TO INSTALLING PAVEMENT BASE, BINDER, SURFACE AND PRIOR TO POURING ANY CONCRETE AFTER FORMS HAVE BEEN SET.

24. ALL EXISTING UTILITIES OR IMPROVEMENTS, INCLUDING WALKS, CURBS, PAVEMENT AND PARKWAYS DAMAGED OR REMOVED DURING CONSTRUCTION SHALL BE PROMPTLY RESTORED TO THEIR RESPECTIVE ORIGINAL CONDITION.

25. AT THE CLOSE OF EACH WORKING DAY AND AT THE CONCLUSION OF CONSTRUCTION OPERATIONS, ALL DRAINAGE STRUCTURES AND FLOW LINES SHALL BE FREE FROM DIRT AND DEBRIS.

26. TREES NOT MARKED FOR REMOVAL SHALL BE CONSIDERED AS DESIGNATED TO BE SAVED AND SHALL BE PROTECTED UNDER THE PROVISIONS OF ARTICLE 201.05 OF THE STANDARD SPECIFICATIONS.

27.

28. LIMB PRUNING SHALL BE PERFORMED UNDER THE SUPERVISION OF AN APPROVED LANDSCAPE ARCHITECT AND SHALL BE UNDERTAKEN IN A TIMELY FASHION SO AS NOT TO INTERFERE WITH CONSTRUCTION.

29. ALL LIMBS, BRANCHES, AND OTHER DEBRIS RESULTING FROM THIS WORK SHALL BE DISPOSED OF OFF-SITE BY THE CONTRACTOR AT HIS OWN EXPENSE.

30. ALL CUTS OVER ONE-INCH IN DIAMETER SHALL BE MADE FLUSH WITH THE NEXT LARGE BRANCH. WOUNDS OVER ONE-INCH IN DIAMETER SHALL BE PAINTED WITH AN APPROVED TREE PAINT.

31. ANY DEWATERING OF SEWER AND WATER TRENCHES AS WELL AS TEMPORARY SHEETING OR BRACING THAT MAY BE REQUIRED SHALL BE THE RESPONSIBILITY OF THE CONTRACTOR AND SHALL NOT BE CONSIDERED EXTRA WORK. IN THE EVENT THAT SOFT MATERIALS WITH UNCONFINED COMPRESSIVE STRENGTH LESS THAN 0.5 TSF ARE ENCOUNTERED IN SEWER AND WATER MAIN CONSTRUCTION, THE CONTRACTOR SHALL (UPON APPROVAL OF THE OWNER AND/OR ENGINEER) OVER-EXCAVATE TO A DEPTH OF AT LEAST ONE (1) FOOT BELOW THE BOTTOM OF THE PIPE AND BACKFILL WITH COMPACTED CRUSHED STONE, PROPERLY FORMED TO FIT THE BOTTOM OF THE PIPE.

32. CONTRACTOR SHALL RECORD VIDEO OF THE WORK AREA PRIOR TO CONSTRUCTION FOR THE PURPOSE OF DOCUMENTING EXISTING CONDITIONS. A COPY OF THE VIDEO SHALL BE PROVIDED TO THE VILLAGE.

33. TRENCH BACKFILL WILL BE REQUIRED TO THE FULL DEPTH ABOVE ALL UNDERGROUND UTILITIES WITHIN TWO FEET OF PROPOSED OR EXISTING PAVEMENTS, UTILITIES, BUILDINGS, AND SIDEWALKS. THE TRENCH BACKFILL SHALL BE DONE IN ACCORDANCE WITH IDOT STANDARD SPECIFICATIONS. THE TRENCH BACKFILL MATERIAL SHALL CONSIST OF CRUSHED GRAVEL CONFORMING TO IDOT GRADATION CA-7.

34. WHERE SHOWN ON THE PLANS OR AS DIRECTED BY THE ENGINEER, EXISTING DRAINAGE STRUCTURES AND SYSTEMS SHALL BE CLEANED OF DEBRIS AND PATCHED AS NECESSARY TO ASSURE INTEGRITY OF THE STRUCTURE.

GENERAL NOTES (CONT.)

34. HYDRANTS SHALL NOT BE FLUSHED DIRECTLY ONTO THE ROAD SUBGRADES. WHEREVER POSSIBLE, HOSES SHALL BE USED TO DIRECT THE WATER INTO STORM SEWERS. DAMAGE TO THE ROAD SUBGRADE OR LOT AREAS DUE TO EXCESSIVE WATER SATURATION AND/OR EROSION FROM HYDRANT FLUSHING OR FROM LEAKS IN THE WATER DISTRIBUTION SYSTEM, WILL BE THE RESPONSIBILITY OF THE CONTRACTOR FLUSHING OR USING THE HYDRANT TO MAKE ALL NECESSARY REPAIRS AT HIS EXPENSE. THE CONTRACTOR SHALL PROVIDE ALL CONSTRUCTION WATER AT HIS EXPENSE.

35. AFTER THE STORM SEWER SYSTEM HAS BEEN CONSTRUCTED THE CONTRACTOR SHALL PLACE EROSION CONTROL AT LOCATIONS SHOWN ON THE PLANS OR AS SELECTED IN THE FIELD BY THE ENGINEER. INLET PROTECTION (INLET BASKETS) SHALL BE INSTALLED IN EACH STRUCTURE AS SOON AS THE STRUCTURE INSTALLATION IS COMPLETE. THE PURPOSE OF THE EROSION CONTROL WILL BE TO MINIMIZE THE AMOUNT OF SILTATION, WHICH NORMALLY WOULD ENTER THE STORM SEWER SYSTEM FROM ADJACENT AND/OR UPSTREAM DRAINAGE AREAS.

36. EROSION CONTROL MEASURES SHALL BE INSTALLED IN ACCORDANCE WITH ILLINOIS URBAN MANUAL AND SHALL BE MAINTAINED BY THE CONTRACTOR AND SHALL REMAIN IN PLACE UNTIL A SUITABLE GROWTH OF GRASS ACCEPTABLE TO THE ENGINEER HAS BEEN DEVELOPED.

37. UPON PROJECT COMPLETION, THE CONTRACTOR SHALL PROVIDE FINAL RECORD DRAWINGS TO THE OWNER AND ENGINEER FOR REVIEW PRIOR TO ANY REQUEST FOR FINAL INSPECTION. AT A MINIMUM, THE RECORD DRAWINGS SHALL INDICATE THE FINAL LOCATION AND LAYOUT OF ALL SITE IMPROVEMENTS, INCLUDING BUT NOT LIMITED TO, VERIFICATION OF ALL BUILDING PAD AND FINISHED FLOOR ELEVATIONS, UTILITY RIM AND INVERT ELEVATIONS, SPOT GRADE ELEVATIONS, LOCATIONS OF ALL WATER SERVICE B-BOXES, SANITARY SEWER SERVICES, AND STORM SEWER SERVICES AND SHALL INCORPORATE ALL FIELD DESIGN CHANGES INCLUDING THOSE APPROVED BY THE OWNER, ENGINEER AND/OR PROJECT GOVERNING AUTHORITY. RECORD DRAWINGS SHALL BE PREPARED BY OR UNDER THE DIRECT SUPERVISION OF A LICENSED PROFESSIONAL LAND SURVEYOR.

38. RECORD DRAWINGS SHALL BE SUBMITTED TO THE VILLAGE AT THE COMPLETION OF THE PROJECT AND PRIOR TO ACCEPTING THE IMPROVEMENTS.

EARTHWORK

1. TOPSOIL EXCAVATION

   A. TOPSOIL, ORGANIC MATERIAL, OR ANY OTHER UNSUITABLE MATERIALS SHALL BE REMOVED FROM AREAS REQUIRING STRUCTURAL FILL.

   B. PLACEMENT OF EXCAVATED MATERIAL SHALL BE DESIGNATED BY THE OWNER FOR FUTURE USE WITHIN AREAS TO BE LANDSCAPED OR AS FILL IN THE AREAS NOT REQUIRING STRUCTURAL FILL MATERIAL.

   C. EXCESS MATERIALS NOT UTILIZED AS FILL OR NOT STOCKPILED FOR FUTURE LANDSCAPING, SHALL BE COMPLETELY REMOVED FROM THE CONSTRUCTION SITE AND DISPOSED OF OFF-SITE BY THE CONTRACTOR.

2. EARTH EXCAVATION

   A. EXCAVATION OF EARTH AND OTHER MATERIALS, WHICH ARE SUITABLE FOR USE AS STRUCTURAL FILL SHALL BE WITHIN A TOLERANCE OF 0.05 FEET FOR PADS AND PAVEMENT, AT 0.1 FEET +/- OF THE PLAN SUBGRADE ELEVATIONS. THE +/- TOLERANCE WITHIN PAVEMENT AREAS UTILIZING EARTH MATERIALS SHALL "BALANCE" AS PART OF THE FINE GRADING OPERATION.

   B. PLACEMENT OF EARTH AND OTHER SUITABLE MATERIALS SHALL BE PLACED WITHIN THOSE AREAS REQUIRING STRUCTURAL FILL TO ACHIEVE THE PLAN SUBGRADE ELEVATIONS WITHIN A TOLERANCE OF 0.1 FEET +/-. THE FILL MATERIAL SHALL BE PLACED IN LOOSE LIFTS, NOT EXCEED EIGHT INCHES IN THICKNESS. THE WATER CONTENT SHALL BE ADJUSTED IN ORDER TO ACHIEVE THE REQUIRED COMPACTION. EARTH MATERIAL MAY BE PLACED WITHIN THOSE AREAS OF THE SITE NOT REQUIRING STRUCTURAL FILL, WITHIN THE PLAN SUBGRADE ELEVATION. IN AREAS REQUIRING STRUCTURAL FILL, THE EARTH MATERIAL SHALL NOT BE PLACED OVER TOPSOIL OR OTHER UNSUITABLE MATERIALS. THE STRUCTURAL SUBGRADE AREA SHALL EXTEND TO THE ZONE OF INFLUENCE IN ALL FILL AREAS.

   C. COMPACTION OF THE EARTH AND OTHER SUITABLE MATERIALS SHALL BE TO A MINIMUM OF 95% OF THE MODIFIED PROCTOR DRY DENSITY. THIS INCLUDES AREAS WITHIN PROPOSED PAVEMENT AND BUILDING PAD LOCATIONS, SIDEWALKS, ETC. IN NON-STRUCTURAL FILL AREAS, 90% TO 95% OF THE MODIFIED PROCTOR DRY DENSITY IS REQUIRED.

3. UNSUITABLE MATERIAL

   A. UNSUITABLE MATERIAL SHALL BE CONSIDERED AS MATERIAL THAT IS NOT SUITABLE FOR THE SUPPORT OF PAVEMENT AND BUILDING CONSTRUCTION. IF IT IS ENCOUNTERED BELOW NORMAL TOPSOIL DEPTHS AND THE PROPOSED SUBGRADE ELEVATION, IT SHALL BE REMOVED AND REPLACED WITH SELECT GRANULAR MATERIAL APPROVED BY THE SOILS ENGINEER. THE DECISION TO REMOVE SAID MATERIAL AND TO WHAT EXTENT, SHALL BE MADE BY A SOILS ENGINEER WITH THE CONCURRENCE OF THE OWNER.

4. THE GRADING CONTRACTORS RESPONSIBILITIES

   A. MAINTAIN POSITIVE DRAINAGE AT ALL TIMES DURING THE COURSE OF CONSTRUCTION AND PREVENT STORM WATER FROM RUNNING INTO OR STANDING IN EXCAVATED AREAS.

   B. SPREAD AND COMPACT UNIFORMLY ALL EXCESS TRENCH SPOIL, AS SPECIFIED, AFTER COMPLETION OF THE UNDERGROUND IMPROVEMENTS.

   C. SCARIFY AND COMPACT THE UPPER 12 INCHES OF THE SUITABLE SUBGRADE MATERIAL, AS SPECIFIED, IN ALL AREAS THAT MAY BE SOFT DUE TO EXCESS MOISTURE CONTENT. THIS APPLIES TO CUT AREAS AS WELL AS FILL AREAS.

   D. PROVIDE ADDITIONAL WATER TO DRY MATERIAL TO ADJUST THE MOISTURE CONTENT FOR THE PURPOSE OF ACHIEVING THE SPECIFIED COMPACTION.

   E. BACKFILL THE CURB AND GUTTER AFTER CONSTRUCTION AND PRIOR TO THE PLACEMENT OF THE BASE COURSE MATERIAL.

   F. ACCOUNTABLE FOR IMPLEMENTATION OF THE "SOIL EROSION AND SEDIMENTATION CONTROL MEASURES" AS DESCRIBED ON THE PLANS. ALL CONTRACTORS SHALL COMPLY WITH THE SWPPP AND NPDES REQUIREMENTS.

   G. PERFORM LIME STABILIZATION OF THE SUBGRADE MATERIAL IF REQUIRED BY THE SOILS ENGINEER.

5. TESTING AND FINAL ACCEPTANCE

   A. THE CONTRACTOR SHALL PROVIDE, AS A MINIMUM, A TANDEM AXLE TRUCK LOADED TO 14 TONS FOR PROOF ROLLING THE PAVEMENT SUBGRADE. PROOF ROLLING SHALL BE PERFORMED PRIOR TO THE PLACEMENT OF THE CURB AND GUTTER AND BASE MATERIAL. THIS SHALL BE WITNESSED AND APPROVED BY THE MUNICIPAL ENGINEER AND OWNER.

   B. ANY UNSUITABLE AREA ENCOUNTERED AS A RESULT OF PROOF ROLLING, SHALL BE REMOVED AND REPLACED WITH SUITABLE MATERIAL APPROVED BY THE SOILS CONSULTANT. PROOF ROLLING SHALL BE PERFORMED UNTIL THE SUBGRADE IS APPROVED BY THE MUNICIPAL ENGINEER, OWNER AND SOILS ENGINEER.

   C. THE WORK AREAS SHALL BE POSITIVELY DRAINED DURING CONSTRUCTION. FINAL GRADES SHALL BE PROTECTED AGAINST DAMAGE FROM EROSION, SEDIMENTATION AND TRAFFIC.

PAVEMENT

1. FINE GRADING

   A. PRIOR TO THE CONSTRUCTION OF CURB AND GUTTER AND PLACEMENT OF THE BASE MATERIAL, THE STREETS SHALL BE FINE GRADED TO WITHIN 0.05 FEET OF FINAL SUBGRADE ELEVATION, TO A POINT TWO FEET BEYOND THE BACK OF CURB.

2. CURB AND GUTTER

   A. THE TYPE OF THE CURB AND GUTTER SHALL BE AS DETAILED ON THE ENGINEERING PLANS.

   B. THE CURBS SHALL BE BACKFILLED AFTER CONSTRUCTION AND PRIOR TO THE PLACEMENT OF THE BASE COURSE.

   C. THE STONE COST UNDER THE CURB AND GUTTER SHALL BE CONSIDERED INCIDENTAL.

   D. DEPRESSED CURBS FOR DRIVEWAYS AND HANDICAPPED RAMPS SHALL BE INSTALLED PER THE PLANS AND IDOT STANDARDS.

3. PAVEMENT

   A. THE PAVEMENT MATERIALS SHALL BE AS DETAILED ON THE ENGINEERING PLANS. DEPTHS SPECIFIED SHALL BE CONSIDERED THE MINIMUM COMPACTED THICKNESS.

4. GENERAL

   THE PAVING CONTRACTOR SHALL:

   A. REPAIR ANY BASE COURSE AND BINDER COURSE FAILURES PRIOR TO THE INSTALLATION OF THE FINAL BITUMINOUS CONCRETE SURFACE COURSE.

   B. SWEEP CLEAN THE BINDER COURSE PRIOR TO THE INSTALLATION OF THE FINAL BITUMINOUS CONCRETE SURFACE COURSE. ANY DAMAGE TO THE BINDER COURSE SHALL BE REPAIRED BY THE CONTRACTORS AT NO ADDITIONAL COST TO THE OWNER.

   C. PROVIDE CONSTRUCTION, EXPANSION AND CONTRACTION JOINTS FOR CURB AND GUTTER AND P.C.C. SIDEWALK PER IDOT STANDARDS AND MUNICIPAL STANDARDS.

   D. REMOVE ALL EXCESS MATERIALS AND DEBRIS. DISPOSE OF MATERIALS OFF-SITE AT NO ADDITIONAL COST TO THE OWNER.

5. TESTING AND FINAL ACCEPTANCE

   A. PRIOR TO THE PLACEMENT OF THE BASE COURSE, THE SUBGRADE MUST BE PROOF ROLLED AND INSPECTED FOR UNSUITABLE LOCATIONS. IF UNSUITABLE SUBGRADE IS ENCOUNTERED, IT SHALL BE REMOVED AND REPLACED WITH GRANULAR MATERIAL APPROVED BY THE OWNER OR HIS REPRESENTATIVE. THE SUBGRADE SHALL HAVE A MINIMUM IBR VALUE OF 3.0.

   B. PRIOR TO PLACEMENT OF THE BITUMINOUS CONCRETE SURFACE COURSE, THE CONTRACTOR SHALL OBTAIN SPECIMENS OF THE BINDER COURSE WITH A CORE DRILL WHERE DIRECTED AND AS REQUIRED. THICKNESS VERIFICATION WILL BE IN ACCORDANCE WITH THE "STANDARD SPECIFICATIONS FOR ROAD AND BRIDGE CONSTRUCTION."

   C. FINAL ACCEPTANCE OF THE TOTAL PAVEMENT INSTALLATION SHALL BE SUBJECT TO THE TESTING AND VERIFICATION REQUIREMENTS CITED ABOVE.

6. METHOD OF MEASUREMENT

   A. CURB AND GUTTER AND BASE COURSE SHALL BE MEASURED IN THE FIELD BY THE CONTRACTOR. THE QUANTITIES SHALL BE SUBMITTED TO THE ENGINEER FOR VERIFICATION WHEN REQUESTED BY THE OWNER.

   B. WHEN REQUESTED BY THE OWNER, DOCUMENTATION FOR THE INSTALLED BASE COURSE, BITUMINOUS CONCRETE BINDER AND SURFACE COURSE, SHALL BE SUBMITTED TO THE ENGINEER FOR VERIFICATION AS REQUIRED BY THE MUNICIPALITY. WHERE DIRECTED, THE CONTRACTOR SHALL OBTAIN SPECIMENS OF THE BITUMINOUS CONCRETE WITH A CORE DRILL TO CONFIRM THE PLAN THICKNESS. DEFICIENCIES IN THICKNESS SHALL BE ADJUSTED BY THE METHOD DESCRIBED IN THE "STANDARD SPECIFICATIONS FOR ROAD AND BRIDGE CONSTRUCTION."

7. IT SHALL BE THE CONTRACTOR'S SOLE RESPONSIBILITY TO PROVIDE PROPER BARRICADING, WARNING DEVICES AND SAFE TRAFFIC MANAGEMENT WITHIN THE AREA OF CONSTRUCTION. ALL SUCH DEVICES AND THEIR INSTALLATION SHALL CONFORM TO THE ILLINOIS "MANUAL OF UNIFORM TRAFFIC CONTROL DEVICES FOR STREETS AND HIGHWAYS," LATEST EDITION. THIS SHALL BE IN ACCORDANCE WITH THE SUBDIVISION CONTROL ORDINANCE OF THE MUNICIPALITY.

8. LONGITUDINAL JOINT CONSTRUCTION

   A. AS MANY LONGITUDINAL JOINTS AS PRACTICAL SHALL BE CLOSED AT THE END OF EACH DAY OF PAVING. A TACK COAT SHALL BE APPLIED TO THE "COLD" SIDE OF THE LONGITUDINAL JOINT PRIOR TO THE PLACEMENT OF THE HOT SIDE MAT.

   B. LONGITUDINAL JOINT CONSTRUCTION SHALL BE COMPLETED BEFORE THE "COLD" SIDE OF THE JOINT FALLS BELOW 200°F.

   C. IN THE EVENT THE TEMPERATURE OF THE "COLD" SIDE OF A JOINT FALLS BELOW 200°F PRIOR TO JOINT CONSTRUCTION COMPLETION, THE CONTRACTOR SHALL PERFORM THE FOLLOWING:

      1. HEAT THE COLD SIDE JOINT TO 200°F EITHER BY MEANS OF A HAND TORCH OR AN INFRARED HEATER. THE CONTRACTOR SHALL AVOID BURNING THE ASPHALT DURING REHEATING.

      2. APPLY TACK COAT TO THE REHEATED JOINT PRIOR TO ASPHALT PLACEMENT.

   D. THE CONTRACTOR SHALL OFFSET SURFACE COURSE JOINTS FROM BINDER COURSE JOINTS, WHEREVER PRACTICABLE.

9. LONGITUDINAL JOINT DENSITY SPECIFICATIONS

   A. COMPLETED LONGITUDINAL JOINTS SHALL BE ASSESSED BASED ON SECTION 1030 OF THE STANDARD SPECIFICATIONS AND THE "HOT MIX ASPHALT - DENSITY TESTING OF LONGITUDINAL JOINTS" (BDE) AS FOLLOWS:

      LONGITUDINAL JOINT DENSITY TESTING SHALL BE PERFORMED AT EACH RANDOM DENSITY TEST LOCATION. LONGITUDINAL JOINT TESTING SHALL BE LOCATED AT A DISTANCE EQUAL TO THE LIFT THICKNESS OR A MINIMUM OF TWO INCHES FROM EACH PAVEMENT EDGE; I.E. FOR A FOUR INCH LIFT, THE NEAR EDGE OF THE DENSITY GAUGE OR CORE BARREL SHALL BE WITHIN FOUR INCHES FROM THE EDGE OF PAVEMENT. LONGITUDINAL JOINT DENSITY TESTING SHALL BE PERFORMED USING EITHER A CORRELATED NUCLEAR GAUGE OR CORES.

      1. CONFINED EDGE: EACH CONFINED EDGE DENSITY TEST SHALL BE REPRESENTED BY A ONE MINUTE NUCLEAR DENSITY READING OR A CORE DENSITY. THE TESTING SHALL BE INCLUDED IN THE AVERAGE OF DENSITY READINGS OR CORE DENSITIES TAKEN ACROSS THE MAT, WHICH REPRESENTS THE INDIVIDUAL TEST.

      2. UNCONFINED EDGE: EACH UNCONFINED EDGE JOINT DENSITY TEST SHALL BE REPRESENTED BY AN AVERAGE OF THREE, ONE MINUTE DENSITY READINGS OR A SINGLE CORE DENSITY AT THE GIVEN DENSITY TEST LOCATION. THE TESTING SHALL MEET THE DENSITY REQUIREMENTS SPECIFIED HEREIN. THE THREE, ONE MINUTE READINGS SHALL BE SPACED TEN FEET APART LONGITUDINALLY ALONG THE UNCONFINED PAVEMENT EDGE AND CENTERED AT THE RANDOM DENSITY TEST LOCATION.

DENSITY CONTROL LIMITS TABLE

MIXTURE COMPOSITION	PARAMETER	INDIVIDUAL TEST (INCLUDES CONFINED EDGES)	UNCONFINED EDGE JOINT DENSITY MINIMUM
IL-9.5, IL12.5	Ndesign >= 90	92.0-96.0%	90%
IL-9.5, IL9.5L, IL-12.5	Ndesign < 90	92.5-97.4%	90%
IL-19.0, IL-25.0	Ndesign >= 90	93.0-96.0%	90%
IL-19.0, IL-19.0L, IL-25.0	Ndesign < 90	93.0-97.4%	90%
SMA	Ndesign = 50 & 80	93.5-97.4%	91%
ALL OTHER	Ndesign = 30	93.0-97.4%	90%

SANITARY SEWER

1. UNLESS OTHERWISE NOTED ON THE PLANS, ALL SANITARY SEWER SHALL BE RING-TITE PVC (POLYVINYL CHLORIDE) PLASTIC PIPE. ALL PIPE SHALL CONFORM TO ASTM D-3034 WITH ELASTOMERIC RUBBER RING GASKET JOINTS CONFORMING TO ASTM D-3212. THE STANDARD DIMENSION RATIO (SDR) FOR SANITARY PIPE SHALL BE 26. WHERE SPECIFIED, PVC SDR 21 SANITARY SEWER SHALL BE RING-TITE PVC (POLYVINYL CHLORIDE) PLASTIC PIPE, CONFORMING TO ASTM D-2241 WITH ELASTOMERIC RUBBER RING GASKET JOINTS CONFORMING TO ASTM D3139. THE PVC DR18 SANITARY SEWER SHALL CONFORM TO AWWA C900/C905, WITH RUBBER GASKET JOINTS CONFORMING TO AWWA C900/C905.

2. WHERE SANITARY SEWER PIPE IS NOTED AS PVC C900, THE PIPE SHALL BE IN ACCORDANCE WITH AMERICAN WATER WORKS ASSOCIATION (AWWA) C900 WITH WATERTIGHT, PRESSURE RATED JOINTS CONFORMING TO ASTM D3139.

3. CONNECTING SEWER PIPE OF DISSIMILAR MATERIAL IS NOT PERMITTED.

4. ALL FLOOR DRAINS SHALL CONNECT TO THE SANITARY SEWER. CONNECTIONS TO EXISTING SANITARY SEWER SYSTEM SHALL NOT BE COMPLETED UNTIL AUTHORIZED BY THE MUNICIPALITY.

5. ALL UNSUITABLE MATERIAL SHALL BE REMOVED BELOW THE PROPOSED SANITARY SEWER AND REPLACED WITH COMPACTED CRUSHED GRAVEL, CONFORMING TO ASTM D-2321, CL I.

6. COST FOR PIPE BEDDING SHALL BE MERGED WITH THE UNIT PRICE BID FOR THE SEWER.

7. PIPE BEDDING SHALL CONSIST OF A MINIMUM OF SIX INCHES OF COMPACTED CRUSHED GRAVEL, IDOT GRADATION CA-7, FOR ALL SANITARY SEWERS. SANITARY SEWER PIPE SHALL HAVE TAMPED CRUSHED GRAVEL, IDOT GRADATION CA-7, COVER ABOVE THE TOP OF PIPE, TO A MINIMUM OF 12 INCHES. THE BEDDING AND TRENCH BACKFILL MATERIAL SHALL CONFORM TO IDOT GRADATION CA-7 AND INSTALLED PER ASTM D-2321 CLASS I.

8. WATER MAINS SHALL BE SEPARATED FROM SANITARY SEWERS AND STORM SEWERS IN ACCORDANCE WITH IEPA REQUIREMENTS AS SPECIFIED IN THE "WATER MAIN" SECTION.

9. NO WATER LINE SHALL BE PLACED IN THE SAME TRENCH AS A SEWER LINE.

10. THE TESTING OF THE PIPE STRAIGHTNESS AND FIELD TESTING, SHALL BE IN ACCORDANCE WITH THE DEVELOPMENT CODE OF THE MUNICIPALITY.

11. SANITARY SEWER MANHOLES SHALL BE FOUR FOOT INNER DIAMETER, PRECAST REINFORCED CONCRETE RINGS OR MONOLITHIC CONCRETE, CONFORMING TO ASTM C 478. MANHOLES SHALL HAVE PRECAST FILLETS. THE STRUCTURE SHALL HAVE AN ECCENTRIC CONE INSTALLED, LINING UP WITH THE MANHOLE STEPS. ALL MANHOLE STEPS SHALL BE NEENAH R-1981-I, NEOPRENE/FIBERGLASS COATED, AT 16 INCHES ON-CENTER.

12. ALL SANITARY SEWER MANHOLE LIDS SHALL BE NEENAH R-1550-A OR EAST JORDAN 1050/APPROVED EQUAL. THE LIDS SHALL HAVE RECESSED (CONCEALED) PICK HOLE AND BE SELF SEALING WITH "O" RING GASKET. THE LIDS SHALL HAVE THE WORD "SANITARY" AND THE MUNICIPALITY NAME EMBOSSED ON THE LID.

13. ALL MANHOLE JOINTS SHALL BE SEALED WITH "O" RING JOINTS. ADDITIONALLY, MANHOLES SHALL HAVE AN INTERNAL OR EXTERNAL SEALING SYSTEMS SUCH AS CANUSA WRAPIDSEAL, CRETEX CHIMNEY SEAL OR ADAPTER, INC. NO MORE THAN EIGHT INCHES OF PRECAST CONCRETE ADJUSTING RINGS SHALL BE USED TO ADJUST FRAME ELEVATIONS. FRAMES SHALL BE SET ON BITUMINOUS MASTIC. MANHOLE SECTIONS SHALL HAVE GASKETED COUPLINGS, "A-LOK" OR APPROVED EQUAL.

14. DROP MANHOLE ASSEMBLIES SHALL BE PROVIDED AT THE JUNCTION OF SANITARY SEWERS WHERE THE DIFFERENCE IN INVERT GRADES EXCEEDS TWO FEET OR AT LOCATIONS SHOWN ON THE PLANS. THE ENTIRE DROP ASSEMBLY SHALL BE CAST IN CONCRETE MONOLITHICALLY WITH THE MANHOLE BARREL.

15. INSPECTION OF MANHOLES: ALL MANHOLES SHALL BE THOROUGHLY CLEANED OF DIRT AND DEBRIS. ALL VISIBLE LEAKAGE SHALL BE ELIMINATED BEFORE FINAL INSPECTION AND ACCEPTANCE.

16. TESTING FOR ACCEPTANCE OF SANITARY SEWERS AND MANHOLES, INCLUDING SERVICE LINES, SHALL INCLUDE LOW PRESSURE AIR TEST AND DEFLECTION TEST PER STANDARD SPECIFICATIONS AND SUBDIVISION REGULATIONS OF THE MUNICIPALITY. THE TESTS SHALL BE APPROVED BY THE MUNICIPALITY BEFORE ACCEPTANCE. ALL SANITARY MANHOLES SHALL BE VACUUM TESTED FOR LEAKAGE IN ACCORDANCE WITH MUNICIPAL STANDARDS AND ASTM C 1244-02.

17. ALL SANITARY SEWERS SHALL BE TELEVISED. A COPY OF THE RECORDING AND A WRITTEN REPORT SHALL BE SUBMITTED TO THE MUNICIPALITY FOR APPROVAL. THE REPORT SHALL INCLUDE STUB LOCATIONS, A DESCRIPTION OF ALL DEFECTS, WATER LEVEL, LEAKS AND IDENTIFICATION OF LENGTH FROM THE MANHOLE NUMBER SPECIFIED ON THE APPROVED PLANS. ALL COSTS SHALL BE INCIDENTAL TO THE WORK. TESTING SHALL BE WITNESSED AND APPROVED BY THE MUNICIPALITY BEFORE FINAL ACCEPTANCE. THE LOCATION OF TELEVISION INSPECTION SHALL BE DESIGNATED BY THE MUNICIPAL ENGINEER.

18. IF THE SANITARY SEWER INSTALLATION FAILS TO MEET THE TEST REQUIREMENTS SPECIFIED, THE CONTRACTOR SHALL DETERMINE THE CAUSE OR CAUSES OF THE DEFECT. AT HIS OWN EXPENSE, THE CONTRACTOR SHALL REPAIR OR REPLACE ALL MATERIALS AND WORKMANSHIP AS NECESSARY TO COMPLY WITH THE TEST REQUIREMENTS.

19. THE CERTIFICATION CONTRACTOR SHALL SUBMIT CERTIFIED COPIES OF ALL REPORTS OF THE TESTS CONDUCTED BY AN INDEPENDENT LABORATORY BEFORE INSTALLATION OF PVC PLASTIC PIPE. TESTS SHALL BE CONDUCTED IN ACCORDANCE WITH THE STANDARD METHOD OF TESTING FOR "EXTERNAL LOADING PROPERTIES OF PLASTIC PIPE BY PARALLEL PLATE LOADING," ASTM STANDARD D-2412. TESTS SHALL ALSO BE CONDUCTED IN ACCORDANCE WITH ASTM D-3212, TO DEMONSTRATE JOINT PERFORMANCE AT 5% MAXIMUM DIAMETRIC DEFLECTION OF THE SPIGOT, AS SPECIFIED IN ASTM D-3212 SPECIFICATIONS.

STORM SEWER

1. ALL STORM SEWER SHALL BE CONSTRUCTED IN ACCORDANCE WITH THE STANDARD SPECIFICATIONS FOR WATER AND SEWER MAIN CONSTRUCTION IN ILLINOIS, IN ADDITION TO THE SUBDIVISION CONTROL ORDINANCE OF THE MUNICIPALITY.

2. UNLESS OTHERWISE NOTED ON THE PLANS, ALL STORM SEWERS SHALL BE REINFORCED CONCRETE CULVERT PIPE (RCP), ASTM C 76, WITH "O" RING RUBBER GASKET JOINTS CONFORMING TO ASTM C-443.

3. HDPE STORM SEWER PIPE SHALL BE HIGH DENSITY POLYETHYLENE PIPE PER ASTM F-2306 WITH WATERTIGHT JOINTS CONFORMING TO ASTM D-3212.

4. ALL STORM SEWER UNDERDRAIN PIPE SHALL BE PERFORATED PVC (POLYVINYL CHLORIDE) SDR 26. PIPE SHALL CONFORM TO ASTM D-3034 WITH SOLVENT WELDED JOINTS CONFORMING TO ASTM D-2672.

5. ALL DOWNSPOUT AND FOOTING DRAINS SHALL BE DISCHARGED TO THE STORM SEWER SYSTEM.

6. MANHOLE, CATCH BASIN AND INLET BOTTOMS SHALL BE PRECAST CONCRETE SECTIONAL UNITS OR MONOLITHIC CONCRETE. MANHOLES AND CATCH BASINS SHALL BE FOUR FEET IN DIAMETER UNLESS OTHERWISE SPECIFIED ON THE PLANS. MANHOLE JOINTS SHALL BE "O" RING GASKET JOINTS. A MAXIMUM OF SIX INCHES OF ADJUSTING RINGS SHALL BE USED TO ADJUST FRAME ELEVATIONS. THE ADJUSTING RINGS SHALL BE SET WITHIN A FULL MORTAR BED.

7. ALL STORM SEWERS SHALL BE INSTALLED ON TYPE "A" BEDDING, 1/4 TO 3/4 INCH IN SIZE, WITH A MINIMUM THICKNESS EQUAL TO 1/4 OF THE OUTSIDE DIAMETER OF THE SEWER PIPE, BUT NOT LESS THAN FOUR INCHES. USING BLOCKS OF ANY KIND FOR GRADE IS NOT PERMITTED. THE GRANULAR MATERIAL FOR BEDDING AND TRENCH BACKFILL MATERIAL SHALL CONFORM TO IDOT GRADATION CA-7. THE GRANULAR MATERIAL FOR BEDDING AND INITIAL BACKFILL OF FLEXIBLE PIPE SHALL BE NON-ANGULAR GRAVEL MATERIAL CONFORMING TO ASTM D-2321, CLASS I. THE COST OF BEDDING MATERIAL SHALL BE MERGED WITH THE UNIT PRICE BID FOR THE SEWER. THE BEDDING MATERIALS SHALL BE COMPACTED TO 95% OF THE MODIFIED PROCTOR DENSITY.

8. THE FRAME AND GRATE OR CLOSED LID TYPE SHALL BE AS SPECIFIED ON THE UTILITY PLAN. THE MANHOLE LIDS SHALL BE A MACHINE SURFACED, NON-ROCKING DESIGN. ALL CASTINGS SHALL BE EMBOSSED WITH A FISH IMAGE AND "DUMP NO WASTE-DRAINS TO WATERWAYS" MESSAGE. THE CLOSED LIDS SHALL HAVE THE WORD "STORM" AND THE MUNICIPALITY NAME EMBOSSED ON THE LID. THE JOINT BETWEEN THE CONCRETE SECTION AND FRAME SHALL BE SEALED WITH A MASTIC COMPOUND.

9. ALL STORM SEWERS SHALL BE THOROUGHLY CLEANED PRIOR TO FINAL INSPECTION AND TESTING.

10. AFTER THE STORM SEWER STRUCTURE HAS BEEN CONSTRUCTED, THE CONTRACTOR SHALL PLACE EROSION CONTROL AT LOCATIONS SHOWN ON THE PLANS OR AS SELECTED IN THE FIELD BY THE ENGINEER. THE PURPOSE OF THE EROSION CONTROL WILL BE TO MINIMIZE THE AMOUNT OF SILTATION NORMALLY ENTERING THE STORM SEWER SYSTEM FROM ADJACENT AND/OR UPSTREAM DRAINAGE AREAS.

WATER MAIN AND WATER SERVICES

1. WATER MAINS SHALL BE CONSTRUCTED OF DUCTILE IRON PIPE (DIP), CLASS 52, CONFORMING TO AWWA C-151 (ANSI A-21.51) WITH CEMENT MORTAR LINING AND BITUMINOUS SEAL COATING, CONFORMING TO ANSI-A-21.4 (AWWA C-104). ALL WATER MAIN SHALL BE ENCASED WITH 8-MIL POLYETHYLENE WRAP. THE POLYETHYLENE MATERIAL SHALL BE IN CONFORMANCE WITH THE MUNICIPAL REGULATIONS.

2. THE JOINTS SHALL BE PUSH-ON JOINTS CONFORMING TO ANSI A-21.11 (AWWA C-111) AND ALL RETAINING GLANDS SHALL BE SET SCREW OR MEGA-LUG TYPE. WATER MAIN FITTINGS SHALL BE OF DUCTILE IRON WITH CEMENT MORTAR LINING AND SEAL COATING WITH PUSH-ON JOINTS, CONFORMING TO ANSI A21.10 (AWWA C-110). ALL TEE BOLTS SHALL BE STAINLESS STEEL, XYLAN COATED.

3. THRUST BLOCKING OR RESTRAINED JOINTS SHALL BE INSTALLED ON ALL WATER MAINS AT ALL BENDS, TEES, ELBOWS, ETC.

4. DISTRIBUTION SYSTEM VALVES SHALL BE RESILIENT SEAT VALVE, CONFORMING TO AWWA C-509, LATEST STANDARDS AND SHALL BE APPROVED BY THE MUNICIPALITY. EACH VALVE SHALL BE INSTALLED IN A VALVE VAULT OR BOX OF SIZE SHOWN ON THE PLANS. THE LIDS SHALL BE NEENAH R-1713-B OR APPROVED EQUAL. LETTERING ON THE CAST IRON FRAME AND LID SHALL INDICATE "WATER" AND THE MUNICIPALITY NAME.

5. A MINIMUM DEPTH OF COVER OF 5'-6" SHALL BE MAINTAINED OVER THE WATER LINES.

6. ALL WATER MAINS SHALL BE PRESSURE TESTED, FLUSHED AND DISINFECTED IN ACCORDANCE WITH AWWA SPECIFICATIONS. EACH VALVE SECTION SHALL BE PRESSURE TESTED FOR A MINIMUM OF FOUR HOURS. THE ONLY ALLOWABLE LEAKAGE IS AS PREDETERMINED BY THE STANDARD SPECIFICATIONS FOR SEWER AND WATER MAIN CONSTRUCTION IN ILLINOIS. AT NO TIME IS THERE TO BE ANY VISIBLE LEAKAGE FROM THE MAIN.

7. FIRE HYDRANTS SHALL BE INSTALLED WITH AN AUXILIARY VALVE WITH CAST IRON VALVE BOX. FIRE HYDRANTS SHALL HAVE A 5" STORZ CONNECTION ON THE PUMPER NOZZLE. FIRE HYDRANTS SHALL CONFORM TO MEET ALL REQUIREMENTS DESCRIBED IN THE SUBDIVISION CONTROL ORDINANCE OF THE MUNICIPALITY. THE HYDRANT SHALL FACE THE ROADWAY. THE FIRE HYDRANTS SHALL BE PAINTED PER THE MUNICIPALITY. THE VALVE BOX LID SHALL HAVE WORD "WATER" EMBOSSED ON THE LID.

8. MAXIMUM DEFLECTION AT PIPE JOINTS SHALL BE IN ACCORDANCE WITH CURRENT MANUFACTURER'S RECOMMENDATIONS AND AWWA SPECIFICATIONS.

9. WATER SERVICE LINES 2" IN DIAMETER OR SMALLER SHALL BE TYPE 'K' COPPER TUBING CONFORMING TO ASTM B88-58. NO COUPLINGS SHALL BE PERMITTED BETWEEN THE CORPORATION AND CURB STOPS OR BETWEEN THE CURB STOP AND THE BUILDING.

10. WATER SERVICE BOXES SHALL BE OF SUFFICIENT LENGTH TO PERMIT THE TOP TO BE INSTALLED FLUSH WITH THE FINISHED GRADE. EACH SERVICE BOX SHALL BE PROVIDED WITH A CAP WITH THE WORD "WATER" CAST IN THE TOP.

11. CATALOG CUTS OR SHOP DRAWINGS SHALL BE SUBMITTED TO THE VILLAGE PUBLIC WORKS DEPARTMENT FOR REVIEW AND APPROVAL PRIOR TO INSTALLATION. INSTALLATION OF COMPONENTS NOT APPROVED BY THE VILLAGE WILL BE CAUSE FOR REMOVAL AND/OR REPLACEMENT.

12. IEPA WATER MAIN PROTECTION

   A. WATER MAINS:

   1. HORIZONTAL SEPARATION:

      a. WATER MAINS SHALL BE LAID AT LEAST 10 FEET HORIZONTALLY FROM ANY EXISTING OR PROPOSED DRAIN, STORM SEWER, SANITARY SEWER OR SEWER SERVICES CONNECTION.

      b. WATER MAINS MAY BE LAID CLOSER THAN 10 FEET TO A SEWER LINE WHEN:

         1. LOCAL CONDITIONS PREVENT A LATERAL SEPARATION OF 10 FEET
         2. THE WATER MAIN INVERT IS AT LEAST 18 INCHES ABOVE THE CROWN OF THE SEWER
         3. THE WATER MAIN IS IN A SEPARATE TRENCH.

      c. BOTH THE WATER MAIN AND DRAIN OR SEWER SHALL BE CONSTRUCTED OF PIPE EQUIVALENT TO WATER MAIN STANDARDS OF CONSTRUCTION WHEN IT IS IMPOSSIBLE TO MEET CONDITION (a) OR (b) ABOVE. THE DRAIN OR SEWER SHALL BE PRESSURE TESTED TO THE MAXIMUM EXPECTED SURCHARGE HEAD BEFORE BACKFILLING.

   2. VERTICAL SEPARATION:

      a. A WATER MAIN SHALL BE LAID SO THAT ITS INVERT IS 18 INCHES ABOVE THE CROWN OF THE DRAIN OR SEWER, WHENEVER WATER MAINS CROSS STORM SEWERS, SANITARY SEWERS OR SEWER SERVICE CONNECTIONS. THE VERTICAL SEPARATION SHALL BE MAINTAINED FOR THAT PORTION OF THE WATER MAIN LOCATED WITHIN 10 FEET HORIZONTALLY OF ANY SEWER OR DRAIN CROSSED. A LENGTH OF WATER MAIN PIPE SHALL BE CENTERED OVER THE SEWER TO BE CROSSED WITH JOINTS EQUIDISTANT FROM THE SEWER OR DRAIN.

      b. IF IT IS IMPOSSIBLE TO OBTAIN THE PROPER VERTICAL SEPARATION AS DESCRIBED IN (a) OR THE WATER MAIN PASSES UNDER A SEWER OR DRAIN, THEN ONE OF THE FOLLOWING METHODS SHALL BE FOLLOWED:

         1. THE STORM DRAIN SHALL BE CONSTRUCTED OF "O" RING JOINTS AND SANITARY SEWER SHALL BE CONSTRUCTED WITH PIPE EQUIVALENT TO WATER MAIN STANDARDS.
         2. THE WATER MAIN MAY BE ENCASED IN A WATERTIGHT CARRIER PIPE AS INDICATED ON THE PLANS AND AS PER THE SPECIAL CROSSING DETAIL SHOWN ON THE DETAIL SHEET.

      c. A VERTICAL SEPARATION OF 18 INCHES BETWEEN THE INVERT OF THE SEWER OR DRAIN AND THE CROWN OF THE WATER MAIN SHALL BE MAINTAINED WHERE A WATER MAIN CROSSES UNDER SEWER. SUPPORT THE SEWER OR DRAIN LINES TO PREVENT SETTLING AND BREAKING THE WATER MAIN.

      d. CONSTRUCTION SHALL EXTEND ON EACH SIDE OF THE CROSSING UNTIL THE NORMAL DISTANCE FROM THE WATER MAIN TO THE SEWER OR DRAIN LINE IS AT LEAST 10 FEET.

SOIL EROSION AND SEDIMENT CONTROL

1. THIS WORK SHALL BE PERFORMED IN ACCORDANCE WITH ALL APPLICABLE PROVISIONS OF THE SUBDIVISION CONTROL ORDINANCE OF THE MUNICIPALITY, AND THE ILLINOIS URBAN MANUAL.

2. BEFORE STARTING CLEARING AND SITE GRADING WORK, A CONSTRUCTION ENTRANCE AND SILT FENCE SHALL BE INSTALLED AS SHOWN ON THE PLANS.

3. THE CONSTRUCTION ENTRANCE TO THE SITE SHALL BE STABILIZED WITH GRAVEL PRIOR TO BEGINNING ANY WORK ON THE SITE. THE ENTRANCE SHALL BE MAINTAINED PERIODICALLY FOR ITS EFFECTIVENESS TO REMOVE DIRT WHICH COULD LEAVE THE SITE BY CONSTRUCTION VEHICLES.

4. SILT FILTER FENCE SHALL BE PLACED AS SHOWN ON THE PLANS AND AS DIRECTED BY THE MUNICIPALITY'S ENGINEERING INSPECTOR TO PREVENT SEDIMENT FROM LEAVING THE SITE.

5. STAKED SILT FENCE SHALL BE INSTALLED AND MAINTAINED AROUND THE INLETS AND CATCH BASINS AS SHOWN ON THE PLANS.

6. THE CONTRACTOR SHALL BE RESPONSIBLE FOR THE PROPER INSTALLATION AND MAINTENANCE OF ALL TEMPORARY AND PERMANENT EROSION CONTROL MEASURES.

7. THE CONTRACTOR SHALL INSPECT EROSION CONTROL MEASURES WEEKLY AND AFTER ANY STORM EVENT IN EXCESS OF 1/2". AN INSPECTION REPORT SHALL BE FILLED OUT EACH TIME AND SHALL BE KEPT IN A BINDER AT JOB SITE AT ALL TIMES ALONG WITH NOI, NPDES PERMIT & SWPPP PLAN.

8. AT THE COMPLETION OF THE PROJECT, ALL STORM SEWER PIPES AND STRUCTURES SHALL BE CLEANED AND FREE OF DIRT AND DEBRIS. THE SEDIMENTATION SHALL BE REMOVED FROM THE STORM SEWER SYSTEM AND SHALL NOT BE WASHED OUT IN THE STORM SEWER SYSTEM.

9. THE TEMPORARY EROSION CONTROL MEASURES SHALL BE IN PLACE EFFECTIVELY UNTIL ALL THE PERMANENT EROSION CONTROL ITEMS ARE FULLY FUNCTIONAL.

10. THE GUARANTEE PERIOD SHALL START AFTER ALL THE PERMANENT EROSION CONTROL MEASURES ARE FULLY FUNCTIONAL AND ACCEPTABLE TO OWNER OR HIS REPRESENTATIVE.

11. STOCKPILES OF ANY KIND SHALL NOT BE PLACED IN SPECIAL MANAGEMENT AREAS.

   11.1. IF A STOCKPILE IS TO REMAIN IN PLACE FOR MORE THAN SEVEN DAYS, THEN SEDIMENT AND EROSION CONTROL SHALL BE PROVIDED FOR SUCH STOCKPILE.

12. IF THE VOLUME, VELOCITY, SEDIMENT LOAD, OR PEAK FLOW RATES OF STORM WATER RUNOFF ARE TEMPORARILY INCREASED DURING CONSTRUCTION, THEN PROPERTIES AND SPECIAL MANAGEMENT AREAS DOWNSTREAM FROM SUCH DEVELOPMENT SITES SHALL BE PROTECTED FROM EROSION AND SEDIMENTATION.

13. STORM SEWER INLETS SHALL BE PROTECTED WITH SEDIMENT TRAPPING OR FILTER CONTROL DEVICES DURING CONSTRUCTION.

14. THE SURFACE OF STRIPPED AREAS SHALL BE PERMANENTLY OR TEMPORARILY PROTECTED FROM SOIL EROSION WITHIN 7 DAYS AFTER FINAL GRADE IS REACHED UNLESS A ½" OR GREATER RAINFALL EVENT IS FORECAST PRIOR TO 7 DAYS. IN THAT CASE THE PROPER SOIL PROTECTION SHALL BE INSTALLED IMMEDIATELY. STRIPPED AREAS NOT AT FINAL GRADE THAT WILL REMAIN UNDISTURBED FOR MORE THAN 7 DAYS AFTER INITIAL DISTURBANCE SHALL BE PROTECTED FROM EROSION UNLESS GRADING ACTIVITIES ARE RESUMED WITHIN 14 DAYS FROM WHEN ACTIVITIES CEASED. TEMPORARY COVER SHALL BE MAINTAINED CONTINUOUSLY UNTIL PERMANENT COVER IS ESTABLISHED.

15. WATER PUMPED OR OTHERWISE DISCHARGED FROM THE SITE DURING CONSTRUCTION DEWATERING, IRRIGATION, OR FIRE HYDRANT FLUSHING SHALL BE FILTERED PRIOR TO LEAVING PROJECT SITE.

16. GRAVELED ROADS, ACCESS DRIVES, PARKING AREAS OF SUFFICIENT WIDTH AND LENGTH, AND VEHICLE WASHDOWN FACILITIES IF NECESSARY, SHALL BE PROVIDED TO PREVENT THE DEPOSIT OF SOIL FROM BEING TRACKED ONTO PUBLIC OR PRIVATE ROADWAYS. ANY SOIL REACHING A PUBLIC OR PRIVATE ROADWAY SHALL BE REMOVED CONTINUOUSLY.

17. ALL CONTRACTORS SHALL COMPLY WITH SWPPP PLAN AND NPDES REQUIREMENT & SHALL SIGN SWPPP ON FILE WITH OWNER OR GENERAL CONTRACTOR.

VILLAGE OF ORLAND PARK ILLINOIS

Village of Orland Park Illinois

POLICE DEPARTMENT FIRING RANGE AND EOC FACILITY

10609 163rd St. Orland Park, IL 60467

JACOB & HEFNER ASSOCIATES
1333 Butterfield Rd, Suite 300, Downers Grove, IL 60515
PHONE: (630) 652-4600, FAX: (630) 652-4601
www.jacobandhefner.com

PLANNING DIVISION APPROVED

Case No: 2023-0508

Date: 12/19/2023

W/Conditions: Yes

W/Out Conditions:

VILLAGE OF ORLAND PARK

ISSUE

ISSUED FOR REVIEW - 90%

REV	DATE	DESCRIPTION
3	01/16/24	ISSUED FOR REVIEW - 90%
2	12/01/23	ISSUED FOR REVIEW - 60%
1	10/18/23	ISSUED FOR REVIEW - 30%

KEY PLAN

N.T.S.

PROJECT NO.	H064
DESIGNED BY	–
DRAWN BY	–
CHECKED BY	–
APPROVED BY	–

SHEET TITLE

GENERAL NOTES AND SPECIFICATIONS

DATE: 01/16/24

REV. 3

SHEET NO. C9

Copyright © 2024 Jacob & Hefner Associates, INC.

A. REFERENCED SPECIFICATIONS

1. ALL CONSTRUCTION SHALL BE IN ACCORDANCE WITH THE APPLICABLE SECTIONS OF THE FOLLOWING, EXCEPT AS MODIFIED HEREIN OR ON THE PLANS:

1.1. STANDARD SPECIFICATIONS FOR ROAD AND BRIDGE CONSTRUCTION (LATEST EDITION), BY THE ILLINOIS DEPARTMENT OF TRANSPORTATION (IDOT SS) FOR ALL IMPROVEMENTS EXCEPT SANITARY SEWER AND WATER MAIN CONSTRUCTION;

1.2. STANDARD SPECIFICATIONS FOR WATER AND SEWER MAIN CONSTRUCTION IN ILLINOIS, LATEST EDITION (SSWS) FOR SANITARY SEWER AND WATER MAIN CONSTRUCTION;

1.3. VILLAGE OF ORLAND PARK MUNICIPAL CODE;

1.4. THE METROPOLITAN WATER RECLAMATION DISTRICT OF GREATER CHICAGO (MWRD) WATERSHED MANAGEMENT ORDINANCE AND TECHNICAL GUIDANCE MANUAL;

1.5. IN CASE OF CONFLICT BETWEEN THE APPLICABLE ORDINANCES NOTED, THE MORE STRINGENT SHALL TAKE PRECEDENCE AND SHALL CONTROL ALL CONSTRUCTION.

B. NOTIFICATIONS

1. THE MWRD LOCAL SEWER SYSTEMS SECTION FIELD OFFICE MUST BE NOTIFIED AT LEAST TWO (2) WORKING DAYS PRIOR TO THE COMMENCEMENT OF ANY WORK (CALL 708-588-4055 OR SEND EMAIL NOTIFICATION WITH PROJECT NAME, LOCATION AND PERMIT NUMBER TO WMOJOBSTART@MWRD.ORG).

2. THE VILLAGE OF ORLAND PARK ENGINEERING DEPARTMENT AND PUBLIC MUST BE NOTIFIED AT LEAST 24 HOURS PRIOR TO THE START OF CONSTRUCTION AND PRIOR TO EACH PHASE OF WORK. CONTRACTOR SHALL DETERMINE ITEMS REQUIRING INSPECTION PRIOR TO START OF CONSTRUCTION OR EACH WORK PHASE.

3. THE CONTRACTOR SHALL NOTIFY ALL UTILITY COMPANIES PRIOR TO BEGINNING CONSTRUCTION FOR THE EXACT LOCATIONS OF UTILITIES AND FOR THEIR PROTECTION DURING CONSTRUCTION. IF EXISTING UTILITIES ARE ENCOUNTERED THAT CONFLICT IN LOCATION WITH NEW CONSTRUCTION, IMMEDIATELY NOTIFY THE ENGINEER SO THAT THE CONFLICT CAN BE RESOLVED. CALL J.U.L.I.E. AT 1-800-892-0123.

C. GENERAL NOTES

1. ALL ELEVATIONS SHOWN ON PLANS REFERENCE THE NORTH AMERICAN VERTICAL DATUM OF 1988 (NAVD88). CONVERSION FACTOR IS N/A FT.

2. MWRD, THE MUNICIPALITY AND THE OWNER OR OWNER'S REPRESENTATIVE SHALL HAVE THE AUTHORITY TO INSPECT, APPROVE, AND REJECT THE CONSTRUCTION IMPROVEMENTS.

3. THE CONTRACTOR(S) SHALL INDEMNIFY THE OWNER, ENGINEER, MUNICIPALITY, MWRD, AND THEIR AGENTS, ETC. FROM ALL LIABILITY INVOLVED WITH THE CONSTRUCTION, INSTALLATION, OR TESTING OF THIS WORK ON THE PROJECT.

4. THE PROPOSED IMPROVEMENTS MUST BE CONSTRUCTED IN ACCORDANCE WITH THE ENGINEERING PLANS AS APPROVED BY MWRD AND THE MUNICIPALITY UNLESS CHANGES ARE APPROVED BY MWRD, THE MUNICIPALITY, OR AUTHORIZED AGENT. THE CONSTRUCTION DETAILS, AS PRESENTED ON THE PLANS, MUST BE FOLLOWED. PROPER CONSTRUCTION TECHNIQUES MUST BE FOLLOWED ON THE IMPROVEMENTS INDICATED ON THE PLANS.

5. THE LOCATION OF VARIOUS UNDERGROUND UTILITIES WHICH ARE SHOWN ON THE PLANS ARE FOR INFORMATION ONLY AND REPRESENTED TO THE BEST KNOWLEDGE OF THE ENGINEER. VERIFY LOCATIONS AND ELEVATIONS PRIOR TO BEGINNING THE CONSTRUCTION OPERATIONS.

6. ANY EXISTING PAVEMENT, SIDEWALK, DRIVEWAY, ETC., DAMAGED DURING CONSTRUCTION OPERATIONS AND NOT CALLED FOR TO BE REMOVED SHALL BE REPLACED AT THE EXPENSE OF THE CONTRACTOR.

7. MATERIAL AND COMPACTION TESTING SHALL BE PERFORMED IN ACCORDANCE WITH THE REQUIREMENTS OF THE MUNICIPALITY, MWRD, AND OWNER.

8. THE UNDERGROUND CONTRACTOR SHALL MAKE ALL NECESSARY ARRANGEMENTS TO NOTIFY ALL INSPECTION AGENCIES.

9. ALL NEW AND EXISTING UTILITY STRUCTURES ON SITE AND IN AREAS DISTURBED DURING CONSTRUCTION SHALL BE ADJUSTED TO FINISH GRADE PRIOR TO FINAL INSPECTION.

10. RECORD DRAWINGS SHALL BE KEPT BY THE CONTRACTOR AND SUBMITTED TO THE ENGINEER AS SOON AS UNDERGROUND IMPROVEMENTS ARE COMPLETED. FINAL PAYMENTS TO THE CONTRACTOR SHALL BE HELD UNTIL THEY ARE RECEIVED. ANY CHANGES IN LENGTH, LOCATION OR ALIGNMENT SHALL BE SHOWN IN RED. ALL WYES OR BENDS SHALL BE LOCATED FROM THE DOWNSTREAM MANHOLE. ALL VALVES, B-BOXES, TEES OR BENDS SHALL BE TIED TO A FIRE HYDRANT.

D. SANITARY SEWER

1. THE CONTRACTOR SHALL TAKE MEASURES TO PREVENT ANY POLLUTED WATER, SUCH AS GROUND AND SURFACE WATER, FROM ENTERING THE EXISTING SANITARY SEWERS.

2. A WATER-TIGHT PLUG SHALL BE INSTALLED IN THE DOWNSTREAM SEWER PIPE AT THE POINT OF SEWER CONNECTION PRIOR TO COMMENCING ANY SEWER CONSTRUCTION. THE PLUG SHALL REMAIN IN PLACE UNTIL REMOVAL IS AUTHORIZED BY THE MUNICIPALITY AND/OR MWRD AFTER THE SEWERS HAVE BEEN TESTED AND ACCEPTED.

3. DISCHARGING ANY UNPOLLUTED WATER INTO THE SANITARY SEWER SYSTEM FOR THE PURPOSE OF SEWER FLUSHING OF LINES FOR THE DEFLECTION TEST SHALL BE PROHIBITED WITHOUT PRIOR APPROVAL FROM THE MUNICIPALITY OR MWRD.

4. ALL SANITARY SEWER CONSTRUCTION SHALL BE IN ACCORDANCE WITH THE STANDARD SPECIFICATIONS FOR WATER AND SEWER MAIN CONSTRUCTION IN ILLINOIS (LATEST EDITION).

5. ALL FLOOR DRAINS SHALL DISCHARGE TO THE SANITARY SEWER SYSTEM.

6. ALL DOWNSPOUTS AND FOOTING DRAINS SHALL DISCHARGE TO THE STORM SEWER SYSTEM.

7. ALL SANITARY SEWER PIPE MATERIALS AND JOINTS (AND STORM SEWER PIPE MATERIALS AND JOINTS IN A COMBINED SEWER AREA) SHALL CONFORM TO THE FOLLOWING:

PIPE MATERIAL	PIPE SPECIFICATIONS	JOINT SPECIFICATIONS
VITRIFIED CLAY PIPE	ASTM C-700	ASTM C-425
REINFORCED CONCRETE SEWER PIPE	ASTM C-76	ASTM C-443
CAST IRON SOIL PIPE	ASTM A-74	ASTM C-564
DUCTILE IRON PIPE	ANSI A21.51	ANSI A21.11
POLYVINYL CHLORIDE (PVC) PIPE		
6-INCH TO 15-INCH DIAMETER SDR 26	ASTM D-3034	ASTM D-3212
18-INCH TO 27-INCH DIAMETER F/DY=46	ASTM F-679	ASTM D-3212
HIGH DENSITY POLYETHYLENE (HDPE)	ASTM D-3350 ASTM D-3035	ASTM D-3261, F-2620 (HEAT FUSION) ASTM D-3212, F-477 (GASKETED)
WATER MAIN QUALITY PVC		
4-INCH TO 36-INCH	ASTM D-2241	ASTM D-3139
4-INCH TO 12-INCH	AWWA C900	ASTM D-3139
14-INCH TO 48-INCH	AWWA C905	ASTM D-3139

THE FOLLOWING MATERIALS ARE ALLOWED ON A QUALIFIED BASIS SUBJECT TO DISTRICT REVIEW AND APPROVAL PRIOR TO PERMIT ISSUANCE. A SPECIAL CONDITION WILL BE ADDED TO THE PERMIT WHEN THE PIPE MATERIAL BELOW IS USED FOR SEWER CONSTRUCTION OR A CONNECTION IS MADE.

PIPE MATERIAL	PIPE SPECIFICATIONS	JOINT SPECIFICATIONS
POLYPROPYLENE (PP) PIPE		
12-INCH TO 24-INCH DOUBLE WALL	ASTM F-2736	ASTM D-3212, F-477
30-INCH TO 60-INCH TRIPLE WALL	ASTM F-2764	ASTM D-3212, F-477

8. ALL SANITARY SEWER CONSTRUCTION (AND STORM SEWER CONSTRUCTION IN COMBINED SEWER AREAS), REQUIRES STONE BEDDING WITH STONE 1/4" TO 1" IN SIZE, WITH MINIMUM BEDDING THICKNESS EQUAL TO 1/4 THE OUTSIDE DIAMETER OF THE SEWER PIPE, BUT NOT LESS THAN FOUR (4) INCHES NOR MORE THAN EIGHT (8) INCHES. MATERIAL SHALL BE CA-7, CA-11 OR CA-13 AND SHALL BE EXTENDED AT LEAST 12" ABOVE THE TOP OF THE PIPE WHEN USING PVC.

9. NON-SHEAR FLEXIBLE-TYPE COUPLINGS SHALL BE USED IN THE CONNECTION OF SEWER PIPES OF DISSIMILAR PIPE MATERIALS.

10. ALL MANHOLES SHALL BE PROVIDED WITH BOLTED, WATERTIGHT COVERS. SANITARY LIDS SHALL BE CONSTRUCTED WITH A CONCEALED PICKHOLE AND WATERTIGHT GASKET WITH THE WORD "SANITARY" CAST INTO THE LID.

11. WHEN CONNECTING TO AN EXISTING SEWER MAIN BY MEANS OTHER THAN AN EXISTING WYE, TEE, OR AN EXISTING MANHOLE, ONE OF THE FOLLOWING METHODS SHALL BE USED:

11.a. A CIRCULAR SAW-CUT OF SEWER MAIN BY PROPER TOOLS ("SHEWER-TAP" MACHINE OR SIMILAR) AND PROPER INSTALLATION OF HUB-WYE SADDLE OR HUB-TEE SADDLE.

11.b. REMOVE AN ENTIRE SECTION OF PIPE (BREAKING ONLY THE TOP OF ONE BELL) AND REPLACE WITH A WYE OR TEE BRANCH SECTION.

11.c. WITH PIPE CUTTER, NEATLY AND ACCURATELY CUT OUT DESIRED LENGTH OF PIPE FOR INSERTION OF PROPER FITTING, USING "BAND SEAL" OR SIMILAR COUPLINGS TO HOLD IT FIRMLY IN PLACE.

12. WHENEVER A SANITARY/COMBINED SEWER CROSSES UNDER A WATERMAIN, THE MINIMUM VERTICAL DISTANCE FROM THE TOP OF THE SEWER TO THE BOTTOM OF THE WATERMAIN SHALL BE 18 INCHES. FURTHERMORE, A MINIMUM HORIZONTAL DISTANCE OF 10 FEET BETWEEN SANITARY/COMBINED SEWERS AND WATERMAINS SHALL BE MAINTAINED UNLESS: THE SEWER IS LAID IN A SEPARATE TRENCH, KEEPING A MINIMUM 18" VERTICAL SEPARATION; OR THE SEWER IS LAID IN THE SAME TRENCH WITH THE WATERMAIN LOCATED AT THE OPPOSITE SIDE ON A BENCH OF UNDISTURBED EARTH, KEEPING A MINIMUM 18" VERTICAL SEPARATION. IF EITHER THE VERTICAL OR HORIZONTAL DISTANCES DESCRIBED CANNOT BE MAINTAINED, OR THE SEWER CROSSES ABOVE THE WATERMAIN, THE SEWER SHALL BE CONSTRUCTED TO WATERMAIN STANDARDS OR IT SHALL BE ENCASED WITH A WATERMAIN QUALITY CARRIER PIPE WITH THE ENDS SEALED.

13. ALL EXISTING SEPTIC SYSTEMS SHALL BE ABANDONED. ABANDONED TANKS SHALL BE FILLED WITH GRANULAR MATERIAL OR REMOVED.

14. ALL SANITARY MANHOLES, (AND STORM MANHOLES IN COMBINED SEWER AREAS), SHALL HAVE A MINIMUM INSIDE DIAMETER OF 48 INCHES, AND SHALL BE CAST IN PLACE OR PRE-CAST REINFORCED CONCRETE.

15. ALL SANITARY MANHOLES, (AND STORM MANHOLES IN COMBINED SEWER AREAS), SHALL HAVE PRECAST "RUBBER BOOTS" THAT CONFORM TO ASTM C-923 FOR ALL PIPE CONNECTIONS. PRECAST SECTIONS SHALL CONSIST OF MODIFIED GROOVE TONGUE AND RUBBER GASKET TYPE JOINTS.

16. ALL ABANDONED SANITARY SEWERS SHALL BE PLUGGED AT BOTH ENDS WITH AT LEAST 2 FEET LONG NON-SHRINK CONCRETE OR MORTAR PLUG.

17. EXCEPT FOR FOUNDATION/FOOTING DRAINS PROVIDED TO PROTECT BUILDINGS, OR PERFORATED PIPES ASSOCIATED WITH VOLUME CONTROL FACILITIES, DRAIN TILES/FIELD TILES/UNDERDRAINS/PERFORATED PIPES ARE NOT ALLOWED TO BE CONNECTED TO OR TRIBUTARY TO COMBINED SEWERS, SANITARY SEWERS, OR STORM SEWERS TRIBUTARY TO COMBINED SEWERS IN COMBINED SEWER AREAS. CONSTRUCTION OF NEW FACILITIES OF THIS TYPE IS PROHIBITED; AND ALL EXISTING DRAIN TILES AND PERFORATED PIPES ENCOUNTERED WITHIN THE PROJECT AREA SHALL BE PLUGGED OR REMOVED, AND SHALL NOT BE CONNECTED TO COMBINED SEWERS, SANITARY SEWERS, OR STORM SEWERS TRIBUTARY TO COMBINED SEWERS.

18. A BACKFLOW PREVENTER IS REQUIRED FOR ALL DETENTION BASINS TRIBUTARY TO COMBINED SEWERS. REQUIRED BACKFLOW PREVENTERS SHALL BE INSPECTED AND EXERCISED ANNUALLY BY THE PROPERTY OWNER TO ENSURE PROPER OPERATION, AND ANY NECESSARY MAINTENANCE SHALL BE PERFORMED TO ENSURE FUNCTIONALITY. IN THE EVENT OF A SEWER SURCHARGE INTO AN OPEN DETENTION BASIN TRIBUTARY TO COMBINED SEWERS, THE PERMITTEE SHALL ENSURE THAT CLEAN UP AND WASH OUT OF SEWAGE TAKES PLACE WITHIN 48 HOURS OF THE STORM EVENT.

E. EROSION AND SEDIMENT CONTROL

1. THE CONTRACTOR SHALL INSTALL THE EROSION AND SEDIMENT CONTROL DEVICES AS SHOWN ON THE APPROVED EROSION AND SEDIMENT CONTROL PLAN.

2. EROSION AND SEDIMENT CONTROL PRACTICES SHALL BE FUNCTIONAL PRIOR TO HYDROLOGIC DISTURBANCE OF THE SITE.

3. ALL DESIGN CRITERIA, SPECIFICATIONS, AND INSTALLATION OF EROSION AND SEDIMENT CONTROL PRACTICES SHALL BE IN ACCORDANCE WITH THE ILLINOIS URBAN MANUAL.

4. A COPY OF THE APPROVED EROSION AND SEDIMENT CONTROL PLAN SHALL BE MAINTAINED ON THE SITE AT ALL TIMES.

5. INSPECTIONS AND DOCUMENTATION SHALL BE PERFORMED, AT A MINIMUM:
   - 5.a. UPON COMPLETION OF INITIAL EROSION AND SEDIMENT CONTROL MEASURES, PRIOR TO ANY SOIL DISTURBANCE.
   - 5.b. ONCE EVERY SEVEN (7) CALENDAR DAYS AND WITHIN 24 HOURS OF THE END OF A STORM EVENT WITH GREATER THAN 0.5 INCH OF RAINFALL OR LIQUID EQUIVALENT PRECIPITATION.

6. SOIL DISTURBANCE SHALL BE CONDUCTED IN SUCH A MANNER AS TO MINIMIZE EROSION. IF STRIPPING, CLEARING, GRADING, OR LANDSCAPING ARE TO BE DONE IN PHASES, THE CO-PERMITTEE SHALL PLAN FOR APPROPRIATE SOIL EROSION AND SEDIMENT CONTROL MEASURES.

7. A STABILIZED MAT OF CRUSHED STONE MEETING THE STANDARDS OF THE ILLINOIS URBAN MANUAL SHALL BE INSTALLED AT ANY POINT WHERE TRAFFIC WILL BE ENTERING OR LEAVING A CONSTRUCTION SITE. SEDIMENT OR SOIL REACHING AN IMPROVED PUBLIC RIGHT-OF-WAY, STREET, ALLEY OR PARKING AREA SHALL BE REMOVED BY SCRAPING OR STREET CLEANING AS ACCUMULATIONS WARRANT AND TRANSPORTED TO A CONTROLLED SEDIMENT DISPOSAL AREA.

8. CONCRETE WASHOUT FACILITIES SHALL BE CONSTRUCTED IN ACCORDANCE WITH THE ILLINOIS URBAN MANUAL AND SHALL BE INSTALLED PRIOR TO ANY ON SITE CONSTRUCTION ACTIVITIES INVOLVING CONCRETE.

9. MORTAR WASHOUT FACILITIES SHALL BE CONSTRUCTED IN ADDITION TO CONCRETE WASHOUT FACILITIES FOR ANY BRICK AND MORTAR BUILDING ENVELOPE CONSTRUCTION ACTIVITIES.

10. TEMPORARY DIVERSIONS SHALL BE CONSTRUCTED AS NECESSARY TO DIRECT ALL RUNOFF FROM HYDROLOGICALLY DISTURBED AREAS TO AN APPROPRIATE SEDIMENT TRAP OR BASIN. VOLUME CONTROL FACILITIES SHALL NOT BE USED AS TEMPORARY SEDIMENT BASINS.

11. DISTURBED AREAS OF THE SITE WHERE CONSTRUCTION ACTIVITIES HAVE TEMPORARILY OR PERMANENTLY CEASED SHALL BE STABILIZED WITH TEMPORARY OR PERMANENT MEASURES WITHIN SEVEN (7) DAYS.

12. ALL FLOOD PROTECTION AREAS AND VOLUME CONTROL FACILITIES SHALL, AT A MINIMUM, BE PROTECTED WITH A DOUBLE-ROW OF SILT FENCE (OR EQUIVALENT).

13. VOLUME CONTROL FACILITIES SHALL NOT BE CONSTRUCTED UNTIL ALL OF THE CONTRIBUTING DRAINAGE AREA HAS BEEN STABILIZED.

14. SOIL STOCKPILES SHALL, AT A MINIMUM, BE PROTECTED WITH PERIMETER SEDIMENT CONTROLS. SOIL STOCKPILES SHALL NOT BE PLACED IN FLOOD PROTECTION AREAS OR THEIR BUFFERS.

15. EARTHEN EMBANKMENT SIDE SLOPES SHALL BE STABILIZED WITH APPROPRIATE EROSION CONTROL BLANKET.

16. STORM SEWERS THAT ARE OR WILL BE FUNCTIONING DURING CONSTRUCTION SHALL BE PROTECTED BY APPROPRIATE SEDIMENT CONTROL MEASURES.

17. THE CONTRACTOR SHALL EITHER REMOVE OR REPLACE ANY EXISTING DRAIN TILES AND INCORPORATE THEM INTO THE DRAINAGE PLAN FOR THE DEVELOPMENT. DRAIN TILES CANNOT BE TRIBUTARY TO A SANITARY OR COMBINED SEWER AREA FOR GREEN INFRASTRUCTURE PRACTICES.

18. IF DEWATERING SERVICES ARE USED, ADJOINING PROPERTIES AND DISCHARGE LOCATIONS SHALL BE PROTECTED FROM EROSION AND SEDIMENTATION. DEWATERING SYSTEMS SHOULD BE INSPECTED DAILY DURING OPERATIONAL PERIODS. THE SITE INSPECTOR MUST BE PRESENT AT THE COMMENCEMENT OF DEWATERING ACTIVITIES.

19. THE CONTRCTOR SHALL BE RESPONSIBLE FOR TRENCH DEWATERING AND EXCAVATION FOR THE INSTALLATION OF SANITARY SEWERS, STORM SEWERS, WATERMAINS AS WELL AS THEIR SERVICES AND OTHER APPURTENANCES. ANY TRENCH DEWATERING, WHICH CONTAINS SEDIMENT SHALL PASS THROUGH A SEDIMENT SETTLING POND OR EQUALLY EFFECTIVE SEDIMENT CONTROL DEVICE. ALTERNATIVES MAY INCLUDE DEWATERING INTO A SUMP PIT, FILTER BAG OR EXISTING VEGETATED UPSLOPE AREA. SEDIMENT LADEN WATERS SHALL NOT BE DISCHARGE TO WATERWAYS, FLOOD PROTECTION AREAS OR THE COMBINED SEWER SYSTEM.

20. ALL PERMANENT EROSION CONTROL PRACTICES SHALL BE INITIATED WITHIN SEVEN (7) DAYS FOLLOWING THE COMPLETION OF SOIL DISTURBING ACTIVITIES.

21. ALL EROSION AND SEDIMENT CONTROL MEASURES SHALL BE MAINTAINED AND REPAIRED AS NEEDED ON A YEAR-ROUND BASIS DURING CONSTRUCTION AND ANY PERIODS OF CONSTRUCTION SHUTDOWN UNTIL PERMANENT STABILIZATION IS ACHIEVED.

22. ALL TEMPORARY EROSION AND SEDIMENT CONTROL MEASURES SHALL BE REMOVED WITHIN THIRTY (30) DAYS AFTER PERMANENT SITE STABILIZATION.

23. THE EROSION AND SEDIMENT CONTROL MEASURES SHOWN ON THE PLANS ARE THE MINIMUM REQUIREMENTS. ADDITIONAL MEASURES MAY BE REQUIRED, AS DIRECTED BY THE ENGINEER, SITE INSPECTOR, OR MWRD.

VILLAGE OF ORLAND PARK ILLINOIS

Village of Orland Park Illinois

POLICE DEPARTMENT FIRING RANGE AND EOC FACILITY

10609 163rd St. Orland Park, IL 60467

JACOB & HEFNER ASSOCIATES
1333 Butterfield Rd, Suite 300, Downers Grove, IL 60515
PHONE: (630) 652-6600, FAX: (630) 652-6601
www.jacobandhefner.com

PLANNING DIVISION APPROVED

Case No: 2023-0508
Date: 12/19/2023
W/Conditions: Yes
W/Out Conditions:

VILLAGE OF ORLAND PARK

ISSUE
ISSUED FOR REVIEW - 90%

REV	DATE	DESCRIPTION
3	01/16/24	ISSUED FOR REVIEW - 90%
2	12/01/23	ISSUED FOR REVIEW - 60%
1	10/18/23	ISSUED FOR REVIEW - 30%

KEY PLAN

N.T.S.

PROJECT NO.	H064
DESIGNED BY	--
DRAWN BY	--
CHECKED BY	--
APPROVED BY	--

SHEET TITLE
MWRD GENERAL NOTES AND SPECIFICATIONS

DATE: 01/16/24
REV. 3
SHEET NO. C10

Copyright © 2024 Jacob & Hefner Associates, INC.

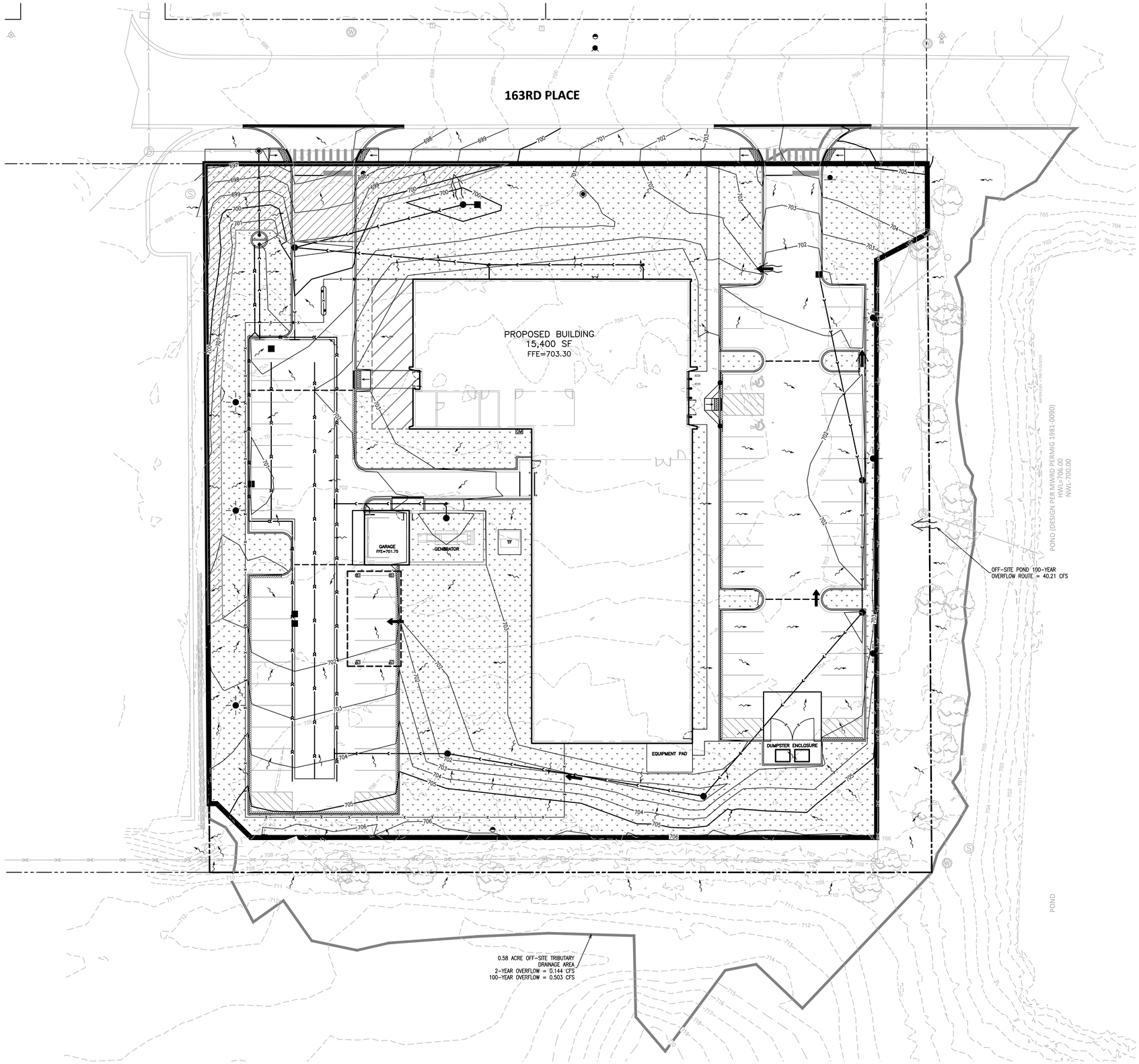

PROPOSED DRAINAGE EXHIBIT LEGEND:

PROPERTY AREA	
DEVELOPMENT AREA	
OFF-SITE TRIBUTARY DRAINAGE AREA	
IMPERVIOUS AREA (CN=98)	
PERVIOUS AREA (CN=80)	
UNRESTRICTED AREA	
EXISTING CONTOUR	700
PROPOSED CONTOUR	700
PROPOSED DRAINAGE DIVIDE	
DRAINAGE DIRECTION	
OVERFLOW ROUTE	
OFF-SITE OVERFLOW ROUTE	
EXISTING STORM SEWER	
PROPOSED STORM SEWER	

STORMWATER MANAGEMENT SUMMARY TABLE:

PROJECT AREA	2.03 ACRES
DEVELOPMENT AREA	1.80 ACRES
PROPOSED IMPERVIOUS AREA (CN=98)	1.05 ACRES
PROPOSED PERVIOUS AREA (CN=80)	0.75 ACRES
UNRESTRICTED AREA (4.8%)	0.087 ACRES
COMPOSITE RUNOFF CURVE NUMBER	90.5
ADJUSTED RUNOFF CURVE NUMBER	85.5
2-YEAR VILLAGE ALLOWABLE RELEASE RATE (1.80 AC X 0.04 CFS/AC)	0.07 CFS
2-YEAR DESIGN RELEASE RATE	0.07 CFS
100-YEAR MWRD ALLOWABLE RELEASE RATE (1.80 AC X 0.30 CFS/AC)	0.54 CFS
100-YEAR VILLAGE ALLOWABLE RELEASE RATE (1.80 AC X 0.15 CFS/AC)	0.27 CFS
100-YEAR DESIGN RELEASE RATE	0.26 CFS
DETENTION VOLUME REQUIRED	0.81 ACRE-FEET
TOTAL DETENTION VOLUME PROVIDED	0.85 ACRE-FEET
EXISTING OFF-SITE DETENTION PROVIDED	0.31 ACRE-FEET
ADDITIONAL DETENTION PROVIDED (CONTECH CMP DETENTION SYSTEM)	0.54 ACRE-FEET
VOLUME CONTROL REQUIRED	0.09 ACRE-FEET
VOLUME CONTROL PROVIDED	0.09 ACRE-FEET
2-YEAR DESIGN RELEASE RATE (ADJUSTED TO ACCOUNT FOR EXISTING OFF-SITE DETENTION)	0.07 CFS
100-YEAR DESIGN RELEASE RATE (ADJUSTED TO ACCOUNT FOR EXISTING OFF-SITE DETENTION)	1.06 CFS
2-YEAR DESIGN RELEASE RATE (3.375" VORTEX RESTRICTOR AT 692.10') (ADJUSTED TO ACCOUNT FOR OFF-SITE TRIBUTARY DRAINAGE AREA)	0.21 CFS
100-YEAR DESIGN RELEASE RATE (8" RESTRICTOR AT 694.00') (ADJUSTED TO ACCOUNT FOR OFF-SITE TRIBUTARY DRAINAGE AREA)	1.56 CFS

VILLAGE OF ORLAND PARK ILLINOIS

Village of Orland Park Illinois

POLICE DEPARTMENT FIRING RANGE AND EOC FACILITY

10609 163rd St. Orland Park, IL 60467

JACOB & HEFNER ASSOCIATES
1333 Butterfield Rd, Suite 300, Downers Grove, IL 60515
PHONE: (630) 652-4600, FAX: (630) 652-4601
www.jacobandhefner.com

PLANNING DIVISION APPROVED

Case No: 2023-0508
Date: 12/19/2023
W/Conditions: Yes
W/Out Conditions:

VILLAGE OF ORLAND PARK

ISSUE
ISSUED FOR REVIEW - 90%

REV	DATE	DESCRIPTION
3	01/16/24	ISSUED FOR REVIEW - 90%
2	12/01/23	ISSUED FOR REVIEW - 60%
1	10/18/23	ISSUED FOR REVIEW - 30%

KEY PLAN

N

GRAPHIC SCALE 1"= 20'
0 10' 20' 40'

1" = 20'

PROJECT NO.	H064
DESIGNED BY	--
DRAWN BY	--
CHECKED BY	--
APPROVED BY	--

SHEET TITLE

MWRD DRAINAGE PLAN

DATE: 01/16/24
REV. 3
SHEET NO. C11

Copyright © 2024 Jacob & Hefner Associates, INC.