CONSULTANT TEAM

PROJECT CONSULTANT: TERRA CONSULTING GROUP, LTD.
600 BUSSE HIGHWAY
PARK RIDGE, IL 60068
(847) 698-6400

SURVEYOR: ASM CONSULTANTS, INC.
P.O. BOX 7
PLANO, IL 60545
(630) 273-2500

APPROVALS

REAL ESTATE: _____

RF: _____

CONSTRUCTION: _____

EQUIPMENT ENGINEERING: _____

OPERATIONS: _____

PROJECT TYPE

PROPOSED LESSEE ANTENNAS MOUNTED ON A NEW MONOPOLE TOWER WITH PROPOSED 9'-4" X 16'-0" EQUIPMENT PLATFORM AT BASE.

SITE COORDINATES:

LATITUDE: 41° 36' 58.54" N (1A CERTIFICATION)

LONGITUDE: 87° 48' 53.39" W (1A CERTIFICATION)

ELEVATION: ±704' (1A)

DRIVING DIRECTIONS:

FROM LESSEE OFFICE: START OUT GOING EAST ON E WOODFIELD RD TOWARD MALL DR. TURN RIGHT ONTO W FRONTAGE RD. MERGE ONTO I-290 E VIA THE RAMP ON THE LEFT. KEEP RIGHT TO TAKE I-290 E TOWARD CHICAGO. MERGE ONTO I-294 S/TRI STATE TOLLWAY S VIA EXIT 15A TOWARD INDIANA (PORTIONS TOLL). MERGE ONTO I-55 N/ADLAI E STEVENSON EXPY N TOWARD CHICAGO. MERGE ONTO US-45 S/S LA GRANGE RD VIA EXIT 279A. TURN LEFT ONTO W 151ST ST. DESTINATION WILL BE ON THE RIGHT.

VICINITY MAP

N.T.S.

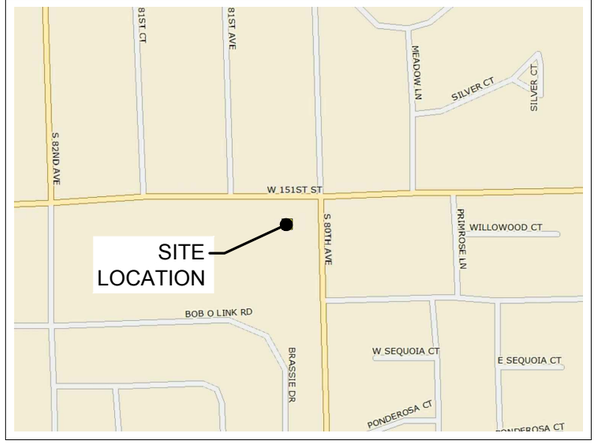

REGIONAL MAP

N.T.S.

CHICAGO SMSA
limited partnership
d/b/a VERIZON WIRELESS

TERRA CONSULTING GROUP, LTD.
600 BUSSE HIGHWAY
PARK RIDGE, IL 60068
PH: 847-698-6400
FAX: 847-698-6401

CHICAGO SMSA

limited partnership

CHICAGO SMSA LIMITED PARTNERSHIP
d/b/a VERIZON WIRELESS
1515 WOODFIELD ROAD, SUITE 1400
SCHAUMBURG, ILLINOIS 60173
PHONE: (847) 619-5397 FAX: (847) 706-7415

TOWER TO BE BUILT AND OWNED BY DRA PROPERTIES LLC.

LOCATION NUMBER: 311466

SITE NAME: W 151ST & S 80TH

15100 S 80TH AVE
ORLAND PARK, IL 60462

OPERATES 24 HOURS A DAY 365 DAYS A YEAR

Call Before You Dig
JULIE ILLINOIS ONE CALL SYSTEM
CALL JULIE TOLL FREE 1(800) 892-0123 48 HOURS BEFORE YOU DIG

LICENSED PROFESSIONAL ENGINEER
THOMAS A. ZIMMERMANN
062-053210
Exp 11/30/18
STATE OF ILLINOIS
4/5/18

GENERATOR TYPE: NATURAL GAS

MAKE: GENERAC
MODEL: SGNG-35-EV-1P 35KW NAT GAS 120/240 1-PH OUTDOOR STANDARD CONFIGURATION

PROJECT INFORMATION

P.I.N. #: 27-14-201-010-0000

ADDRESS: 15100 S 80TH AVE
ORLAND PARK, IL 60462

UTILITIES:
POWER: COMED
LEONARD ANDERSON
(708) 235-2346

FIBER: ONE FIBER
WADE BOWERS
(512)618-3411

GAS: NICOR
KEVIN DOWNEY
(708) 441-6745

JURISDICTION: VILLAGE OF ORLAND PARK

OCCUPANCY: UNINHABITED
COMMERCIAL/RESIDENTIAL

CONSTRUCTION TYPE: RAWLAND

PROPERTY OWNER: ORLAND FIRE DISTRICT
15100 SOUTH 80TH AVE
ORLAND PARK, IL 60462

TOWER OWNER: VILLAGE OF ORLAND PARK

CONTACT PERSON: MARK WILLIAMS (847) 273-0488

APPLICANT: CHICAGO SMSA
limited partnership
d/b/a Verizon Wireless
1515 WOODFIELD ROAD
SCHAUMBURG, IL 60173

CONSTRUCTION MANAGER: RONALD PAULY (636) 534-4094

REAL ESTATE MANAGER: DANNY PEREZ (847) 706-1765

SHEET	DRAWING INDEX	REVISION
T-1	TITLE SHEET	8
LP	LOCATION PLAN	8
C-1	ENGINEERING SITE PLAN	8
C-2	SITE GRADING PLAN (SHEET 1 OF 1)	2
C-3	FENCE DETAILS	-
C-4	SITE DETAILS	-
C-5	PLATFORM FOUNDATION PLAN	2
ANT-1	SITE ELEVATION	2
ANT-2	ANTENNA INFORMATION	-
ANT-3	SITE DETAILS	2
ANT-3A	ANTENNA MOUNTING DETAILS	2
B-1	EQUIPMENT DETAILS	8
B-2	EQUIPMENT DETAILS	8
E-1	UTILITY ROUTING PLAN	8
E-1A	UTILITY RISER DIAGRAMS	3
E-1B	GAS PIPING DETAIL	8
E-2	SITE GROUNDING PLAN	2
E-3	GROUNDING DETAILS	-
E-4	GROUNDING DETAILS	-
SP-1	SPECIFICATIONS	-
SP-2	SPECIFICATIONS	-
P-1	EXISTING SITE PHOTOS	-
	ATTACHMENTS	
L-1,2	SITE SURVEY	-
L-1	LANDSCAPE PLAN	9

REVISIONS

NO.	DESCRIPTION	DATE	BY
3	FINAL PENDING FIBER	08/21/17	DMS
4	UPDATE WITH NEW ECR	08/31/17	JTM
5	UPDATE WITH NEW LAYOUT	09/06/17	DMS
6	FINALS WITH FINER	10/20/17	RA
7	ADDITION OF LANDSCAPING PLAN	12/29/17	JTM
8	UPDATE PER GAS COORDINATION	01/31/18	DMS
9	REVISED LANDSCAPE PLAN PER VILLAGE	04/05/18	JTM

LOC. # 311466

W 151ST
& S 80TH

15100 S 80TH AVE
ORLAND PARK, IL 60462

DRAWN BY:	PP
CHECKED BY:	TAZ
DATE:	07/23/15
PROJECT #:	33-1466

SHEET TITLE
TITLE SHEET

SHEET NUMBER
T-1

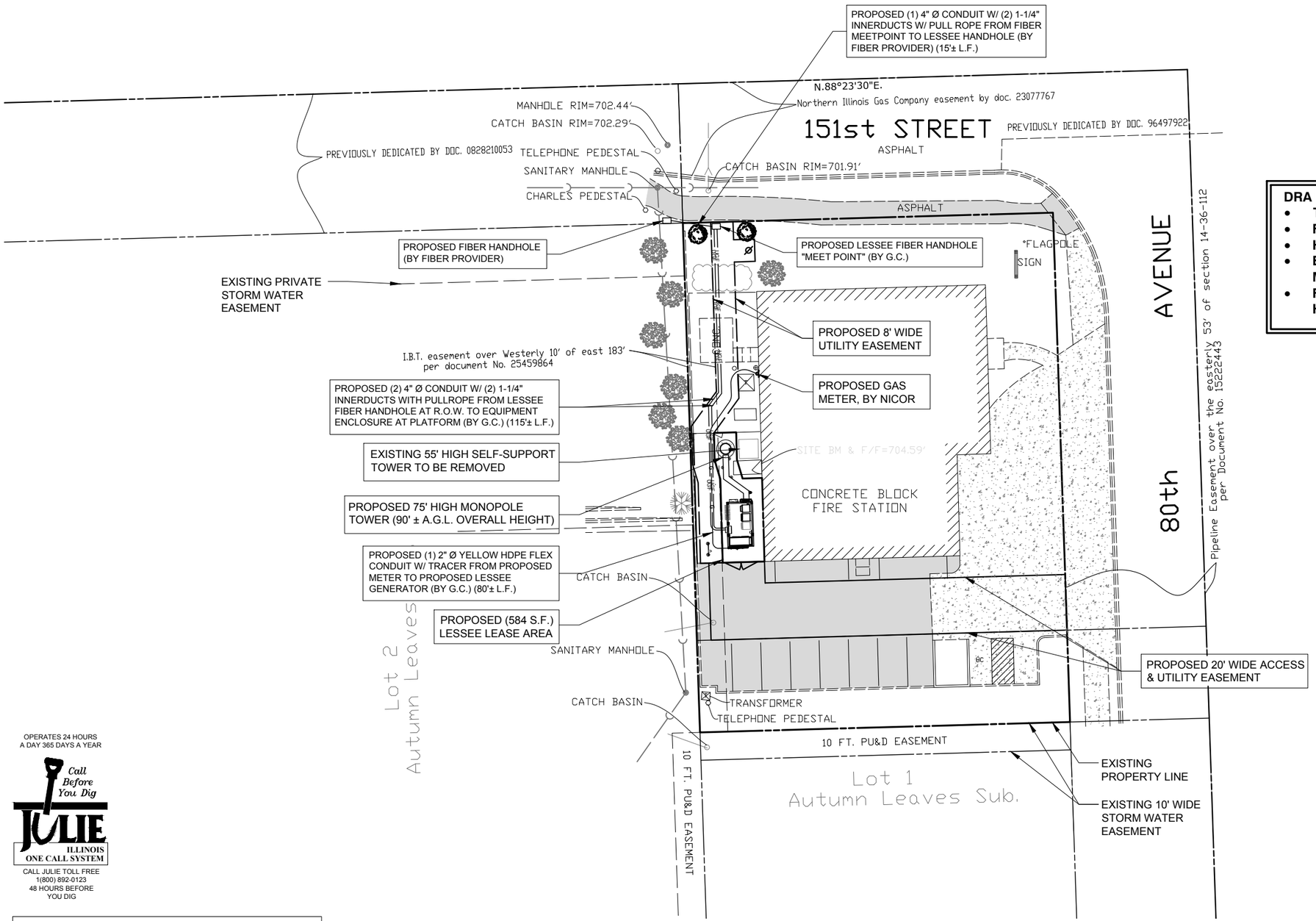

1 LOCATION PLAN
SCALE: 1" = 20'

SCALE 1" = 20'

0 10' 20' 40'

22" x 34" PRINT IS THE FULL SCALE FORMAT. ANY SIZE OTHER THAN THAT IS AT REDUCED SCALE.

DRA PROPERTIES LLC TO INSTALL:

- **TOWER, TOWER FOUNDATION & TOWER GROUND**
- **FENCE & GATE**
- **H-FRAME AND GROUNDING**
- **ELECTRIC CONDUITS AND CONDUCTOR FROM METER TO COMED DEMARC**
- **FIBER CONDUITS WITH PULL ROPE FROM FIBER HANDHOLE IN THE R.O.W. TO THE COMPOUND**

OPERATES 24 HOURS A DAY 365 DAYS A YEAR

Call Before You Dig

JULIE ILLINOIS ONE CALL SYSTEM

CALL JULIE TOLL FREE 1(800) 892-0123 48 HOURS BEFORE YOU DIG

SURVEY PERFORMED BY:

Advanced Surveying & Mapping

Telephone (630) 273-2500
Fax (630) 273-2600
E-MAIL asmc@advct.com

CONTRACTOR IS RESPONSIBLE FOR ANY DAMAGE TO EXISTING PAVEMENT. CONTRACTOR SHALL PHOTOGRAPH AND VIDEOTAPE EXISTING PAVEMENT PRIOR TO CONSTRUCTION. ANY DAMAGE CAUSED DURING CONSTRUCTION SHALL BE REPLACED TO EXISTING OR BETTER CONDITION AT NO ADDITIONAL COST.

THE CONTRACTOR WILL, UPON BECOMING AWARE OF SUBSURFACE OR LATENT PHYSICAL CONDITIONS DIFFERING FROM THOSE DISCLOSED BY THE ORIGINAL SOIL INVESTIGATION WORK, PROMPTLY NOTIFY THE OWNER VERBALLY AND IN WRITING, AS TO THE NATURE OF THE DIFFERING CONDITIONS. NO CLAIM BY THE CONTRACTOR FOR ANY CONDITIONS DIFFERING FROM THOSE ANTICIPATED IN THE PLANS AND SPECIFICATIONS AND DISCLOSED BY THE SOIL STUDIES WILL BE ALLOWED UNLESS THE CONTRACTOR HAS SO NOTIFIED THE OWNER, VERBALLY AND IN WRITING, AS REQUIRED ABOVE, OF SUCH DIFFERING SUBSURFACE CONDITIONS.

CONTRACTOR TO PROVIDE APPROXIMATE 50'x50' STAGING AREA AND TEMPORARY ROAD. CONTRACTOR SHALL COORDINATE WITH ANTENNA CONTRACTOR, A STAGING AREA AND TEMPORARY ROAD THAT IS ACCEPTABLE TO THE OWNER. STAGING AREA AND TEMPORARY ROAD SHALL BE RESTORED TO EXISTING CONDITIONS AS NECESSARY UPON COMPLETION OF THE PROJECT.

BEFORE AND DURING CONSTRUCTION, THE CONTRACTOR SHALL PROVIDE ADEQUATE EROSION CONTROL AS NECESSARY IN THE FORM OF SILT FENCES FOR THE SITE AND BALES AROUND ANY EXISTING MANHOLES, INLETS, OR CATCHBASINS SUSCEPTIBLE TO EROSION. EROSION CONTROL MEASURES SHALL BE PERIODICALLY INSPECTED TO ENSURE PROPER FUNCTION. EROSION CONTROL SHALL BE REMOVED UPON COMPLETION OF WORK.

CHICAGO SMSA
limited partnership
d/b/a VERIZON WIRELESS

TERRA CONSULTING GROUP, LTD.
600 BUSSE HIGHWAY
PARK RIDGE, IL 60068
PH: 847-698-6400
FAX: 847-698-6401

REVISIONS

NO.	DESCRIPTION	DATE	BY
3	FINAL PENDING FIBER	08/21/17	DMS
4	UPDATE WITH NEW ECR	08/31/17	JTM
5	UPDATE WITH NEW LAYOUT	09/06/17	DMS
6	FINALS WITH FINER	10/20/17	RA
7	ADDITION OF LANDSCAPING PLAN	12/29/17	JTM
8	UPDATE PER GAS COORDINATION	01/31/18	DMS
9	REVISED LANDSCAPE PLAN PER VILLAGE	04/05/18	JTM

LOC. # 311466

W 151ST
& S 80TH

15100 S 80TH AVE
ORLAND PARK, IL 60462

DRAWN BY:	PP
CHECKED BY:	TAZ
DATE:	07/23/15
PROJECT #:	33-1466

SHEET TITLE
LOCATION PLAN

SHEET NUMBER
LP

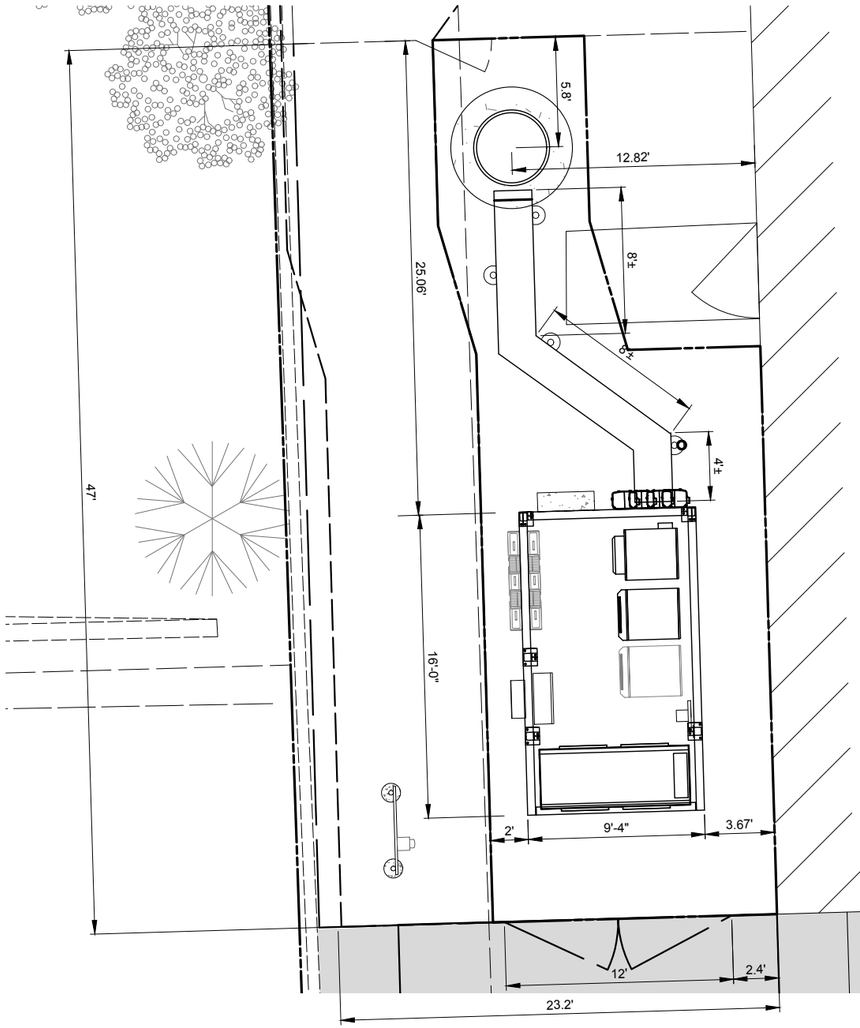

1 SITE DIMENSION PLAN
SCALE: 1" = 4'

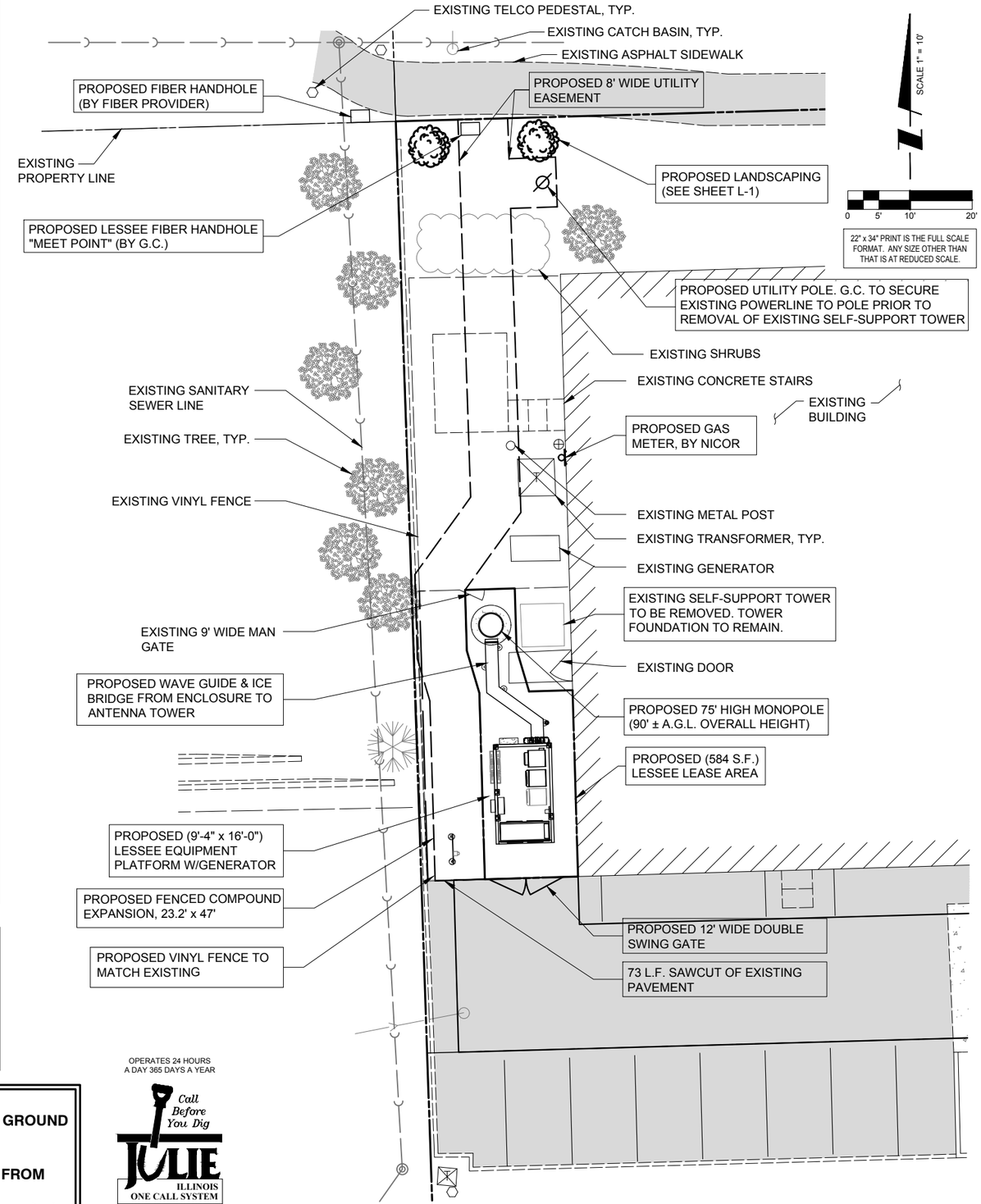

1 ENLARGED SITE PLAN
SCALE: 1" = 10'

SCALE 1" = 10'
0 5' 10' 20'

22" x 34" PRINT IS THE FULL SCALE FORMAT. ANY SIZE OTHER THAN THAT IS AT REDUCED SCALE.

PAVEMENT MATERIAL

LEASE SITE

50 S.Y.
8" COMPACTED AGGREGATE BASE COURSE, WITH 3/4" CRUSHED AGGREGATE, NO FINES. OR APPROVED EQUAL. MIRAFI 500X SUBGRADE GEOTEXTILE FABRIC OR APPROVED EQUAL
71 L.F. OF FENCING

THE CONTRACTOR SHALL INCLUDE AS PART OF THE BID, THE COST OF REMOVAL OF ANY SURFACE VEGETATION AND ORGANIC SOILS OR OTHER DELETERIOUS MATERIALS AND THE REPLACEMENT WITH ENGINEERED BACKFILL FOR THE AGGREGATE ACCESS DRIVE AND LEASE SITE, IN ACCORDANCE WITH THE RECOMMENDATIONS OF THE GEOTECHNICAL REPORT.

SURVEY PERFORMED BY:

Advanced Surveying & Mapping

Telephone (630) 273-2500
Fax (630) 273-2600
E-MAIL asmc@advct.com

DRA PROPERTIES LLC TO INSTALL:

- **TOWER, TOWER FOUNDATION & TOWER GROUND**
- **FENCE & GATE**
- **H-FRAME AND GROUNDING**
- **ELECTRIC CONDUITS AND CONDUCTOR FROM METER TO COMED DEMARC**
- **FIBER CONDUITS WITH PULL ROPE FROM FIBER HANDHOLE IN THE R.O.W. TO THE COMPOUND**

OPERATES 24 HOURS A DAY 365 DAYS A YEAR

Call Before You Dig
JULIE
ILLINOIS ONE CALL SYSTEM
CALL JULIE TOLL FREE
1(800) 892-0123
48 HOURS BEFORE YOU DIG

CHICAGO SMSA
limited partnership
d/b/a VERIZON WIRELESS

TERRA CONSULTING GROUP, LTD.
600 BUSSE HIGHWAY
PARK RIDGE, IL 60068
PH: 847-698-6400
FAX: 847-698-6401

REVISIONS

NO.	DESCRIPTION	DATE	BY
3	FINAL PENDING FIBER	08/21/17	DMS
4	UPDATE WITH NEW ECR	08/31/17	JTM
5	UPDATE WITH NEW LAYOUT	09/06/17	DMS
6	FINALS WITH FINER	10/20/17	RA
7	ADDITION OF LANDSCAPING PLAN	12/29/17	JTM
8	UPDATE PER GAS COORDINATION	01/31/18	DMS
9	REVISED LANDSCAPE PLAN PER VILLAGE	04/05/18	JTM

LOC. # 311466

W 151ST
& S 80TH

15100 S 80TH AVE
ORLAND PARK, IL 60462

DRAWN BY:	PP
CHECKED BY:	TAZ
DATE:	07/23/15
PROJECT #:	33-1466

SHEET TITLE
ENLARGED SITE PLAN

SHEET NUMBER
C-1

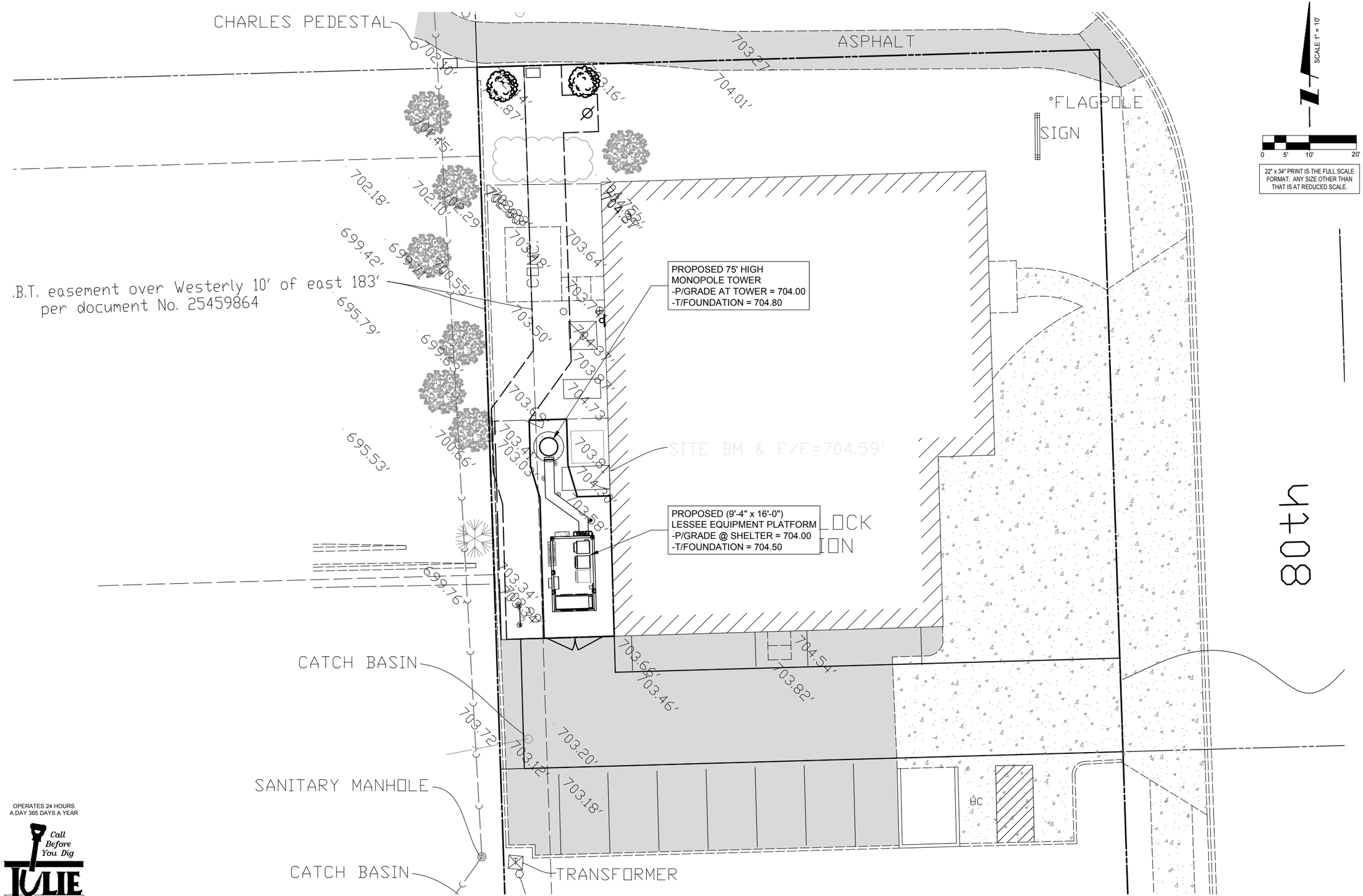

1 SITE GRADING PLAN
SCALE: 1" = 10'

SCALE 1" = 10'

0 5' 10' 20'

22" x 34" PRINT IS THE FULL SCALE FORMAT. ANY SIZE OTHER THAN THAT IS AT REDUCED SCALE.

OPERATES 24 HOURS A DAY 365 DAYS A YEAR

Call Before You Dig

JULIE ILLINOIS ONE CALL SYSTEM

CALL JULIE TOLL FREE 1(800) 892-0123 48 HOURS BEFORE YOU DIG

CHICAGO SMSA
limited partnership
d/b/a VERIZON WIRELESS

TERRA CONSULTING GROUP, LTD.
600 BUSSE HIGHWAY
PARK RIDGE, IL 60068
PH: 847-698-6400
FAX: 847-698-6401

REVISIONS

NO.	DESCRIPTION	DATE	BY
3	FINAL PENDING FIBER	08/21/17	DMS
4	UPDATE WITH NEW ECR	08/31/17	JTM
5	UPDATE WITH NEW LAYOUT	09/08/17	DMS
6	FINALS WITH FINER	10/20/17	RA
7	ADDITION OF LANDSCAPING PLAN	12/29/17	JTM
8	UPDATE PER GAS COORDINATION	01/31/18	DMS
9	REVISED LANDSCAPE PLAN PER VILLAGE	04/05/18	JTM

LOC. # 311466

W 151ST
& S 80TH

15100 S 80TH AVE
ORLAND PARK, IL 60462

DRAWN BY:	PP
CHECKED BY:	TAZ
DATE:	07/23/15
PROJECT #:	33-1466

SHEET TITLE
SITE GRADING PLAN
(SHEET 1 OF 1)

SHEET NUMBER
C-2

NOTES:
WOOD GRAIN STYLE TONGUE & GROVE VINYL PRIVACY FENCE. INSTALL FENCING PER MANUFACTURER'S RECOMMENDATIONS.
CONCRETE FOOTINGS SHALL BE 3000 PSI.

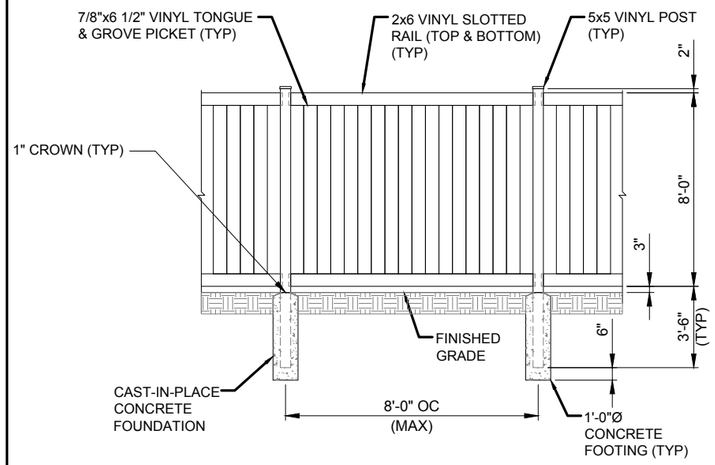

1 PVC POST
N.T.S.

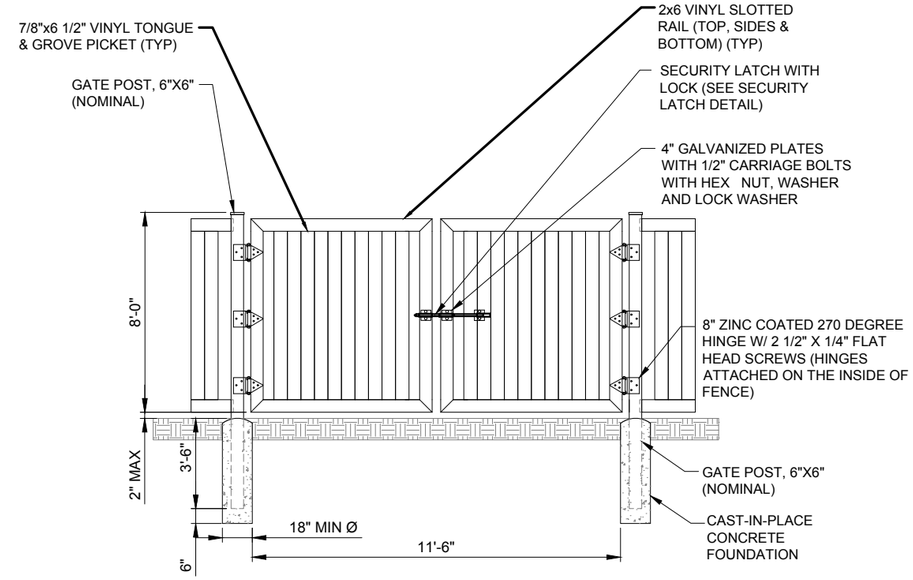

2 12'-0" DOUBLE SWING GATE
N.T.S.

CONTRACTOR TO PROVIDE A 12"x12" CUT-OUT IN THE VINYL FENCING OPPOSITE THE METER LOCATION FOR METER READING. FRAME OUT THE CUT-OUT WITH VINYL 2x4's ON INSIDE OF FENCE PRIOR TO MAKING PENETRATION.

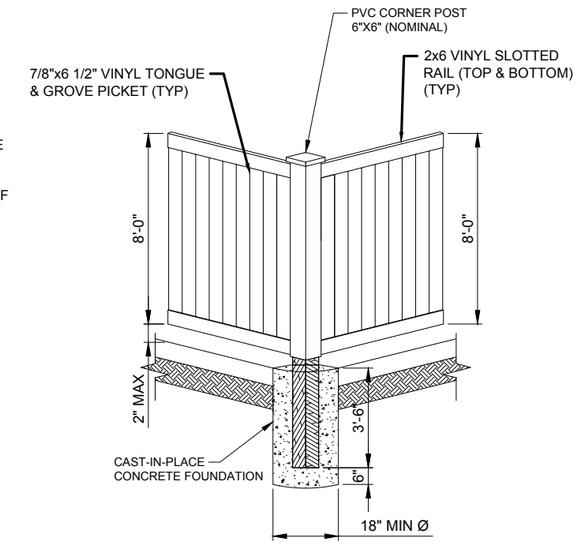

3 CORNER POST
N.T.S.

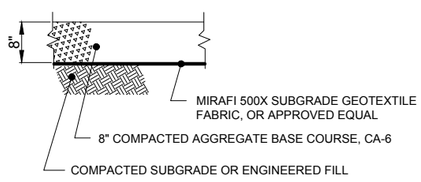

4 AGGREGATE CROSS-SECTION
ACCESS EASEMENT
N.T.S.

OPERATES 24 HOURS A DAY 365 DAYS A YEAR

Call Before You Dig
JULIE
ILLINOIS ONE CALL SYSTEM

CALL JULIE TOLL FREE
1(800) 892-0123
48 HOURS BEFORE YOU DIG

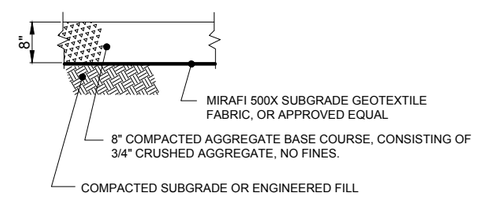

5 AGGREGATE CROSS-SECTION
LEASE SITE
N.T.S.

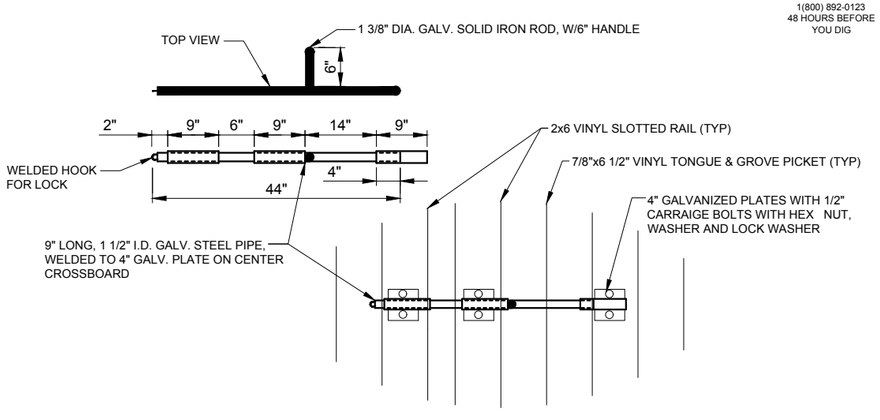

6 SECURITY LATCH
N.T.S.

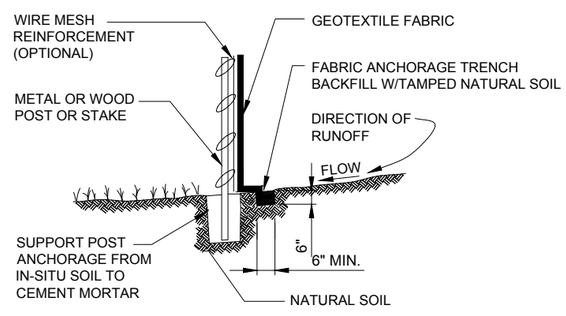

NOTE:
DEPENDING UPON CONFIGURATION, ATTACH FABRIC TO WIRE MESH W/HOG RINGS, STEEL POSTS W/ TIE WIRES, WOOD POSTS W/ NAILS.

7 EROSION CONTROL SILT FENCE DETAIL
N.T.S.

GENERAL NOTES

1) REFER TO THE PROJECT MANUAL FOR ADDITIONAL INFORMATION AND REQUIREMENTS RELATED TO CONSTRUCTION.
2) THE OWNER HAS CAUSED A GEOTECHNICAL EXPLORATION TO BE PERFORMED AT THE SITE.
3) THE CONTRACTOR SHALL NOTIFY THE CLIENT'S GEOTECHNICAL ENGINEER TO COORDINATE HAVING A FIELD REPRESENTATIVE ON SITE FOR TESTING AND INSPECTION.

COPIES OF THE REPORT ARE ISSUED TO THE CONTRACTOR FOR CONVENIENCE ONLY. THE REPORT IS NOT A PART OF THE CONTRACT DOCUMENTS. NEITHER THE OWNER NOR THE ENGINEER/ARCHITECT GUARANTEE THE ACCURACY OR VALIDITY OF THE DATA CONTAINED THEREIN, NOR DO THEY ASSUME ANY RESPONSIBILITY FOR THE CONTRACTOR'S USE OR INTERPRETATION OF THE DATA CONTAINED THEREIN.

GEOTEXTILE PARAMETERS

PROPERTY	MINIMUM VALUE (a)	TEST METHOD
GRAB STRENGTH	180 LBS.	ASTM D-4632-91
PUNCTURE STRENGTH	75 LBS.	ASTM D-4833-88
BURST STRENGTH	290 LBS.	ASTM D-3786
TRAPEZOIDAL TEAR	50 LBS.	ASTM D-4571-87

(a) ALL VALUES REPRESENT MINIMUM ROLL VALUES

NOTES:
THE FABRIC SHOULD BE PLACED IN ACCORDANCE WITH THE MANUFACTURERS RECOMMENDATIONS. INTERSECTIONS OF SHEETS MUST BE SEWN OR SUFFICIENTLY OVERLAPPED (AT LEAST 24 INCHES) OR AS SPECIFIED BY THE MANUFACTURER). THE GEOTEXTILE SHEETS SHOULD ALSO BE PLACED TAUT TO REDUCE WRINKLES OR FOLDS. CARE MUST BE EXERCISED TO PREVENT PHYSICAL DAMAGE OF THE GEOTEXTILE PRIOR TO, DURING AND AFTER INSTALLATION. UTILITIES SHOULD BE INSTALLED BEFORE PLACING THE FABRIC.

CHICAGO SMSA
limited partnership
d/b/a VERIZON WIRELESS

TERRA CONSULTING GROUP, LTD.
600 BUSSE HIGHWAY
PARK RIDGE, IL 60068
PH: 847-698-6400
FAX: 847-698-6401

REVISIONS

NO.	DESCRIPTION	DATE	BY
3	FINAL PENDING FIBER	08/21/17	DMS
4	UPDATE WITH NEW ECR	08/31/17	JTM
5	UPDATE WITH NEW LAYOUT	09/06/17	DMS
6	FINALS WITH FINER	10/20/17	RA
7	ADDITION OF LANDSCAPING PLAN	12/29/17	JTM
8	UPDATE PER GAS COORDINATION	01/31/18	DMS
9	REVISED LANDSCAPE PLAN PER VILLAGE	04/05/18	JTM

LOC. # 311466

W 151ST
& S 80TH

15100 S 80TH AVE
ORLAND PARK, IL 60462

DRAWN BY:	PP
CHECKED BY:	TAZ
DATE:	07/23/15
PROJECT #:	33-1466

SHEET TITLE

SHEET NUMBER
C-3

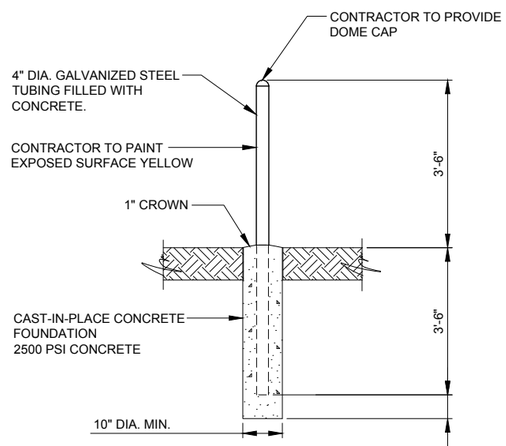

1 BOLLARD DETAIL
N.T.S.

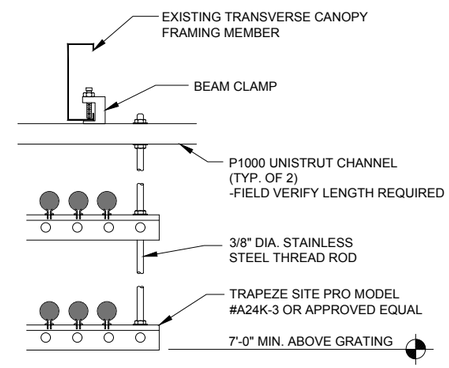

2 COAX TRAPEZE DETAIL (AT PLATFORM)
N.T.S.

OPERATES 24 HOURS
A DAY 365 DAYS A YEAR

Call Before You Dig
JULIE
ILLINOIS
ONE CALL SYSTEM

CALL JULIE TOLL FREE
1(800) 892-0123
48 HOURS BEFORE
YOU DIG

CHICAGO SMSA
limited partnership
d/b/a VERIZON WIRELESS

TERRA CONSULTING GROUP, LTD.
600 BUSSE HIGHWAY
PARK RIDGE, IL 60068
PH: 847-698-6400
FAX: 847-698-6401

REVISIONS

NO.	DESCRIPTION	DATE	BY
3	FINAL PENDING FIBER	08/21/17	DMS
4	UPDATE WITH NEW ECR	08/31/17	JTM
5	UPDATE WITH NEW LAYOUT	09/06/17	DMS
6	FINALS WITH FINER	10/20/17	RA
7	ADDITION OF LANDSCAPING PLAN	12/29/17	JTM
8	UPDATE PER GAS COORDINATION	01/31/18	DMS
9	REVISED LANDSCAPE PLAN PER VILLAGE	04/05/18	JTM

LOC. # 311466

W 151ST
& S 80TH

15100 S 80TH AVE
ORLAND PARK, IL 60462

DRAWN BY:	PP
CHECKED BY:	TAZ
DATE:	07/23/15
PROJECT #:	33-1466

SHEET TITLE
SITE DETAILS

SHEET NUMBER
C-4

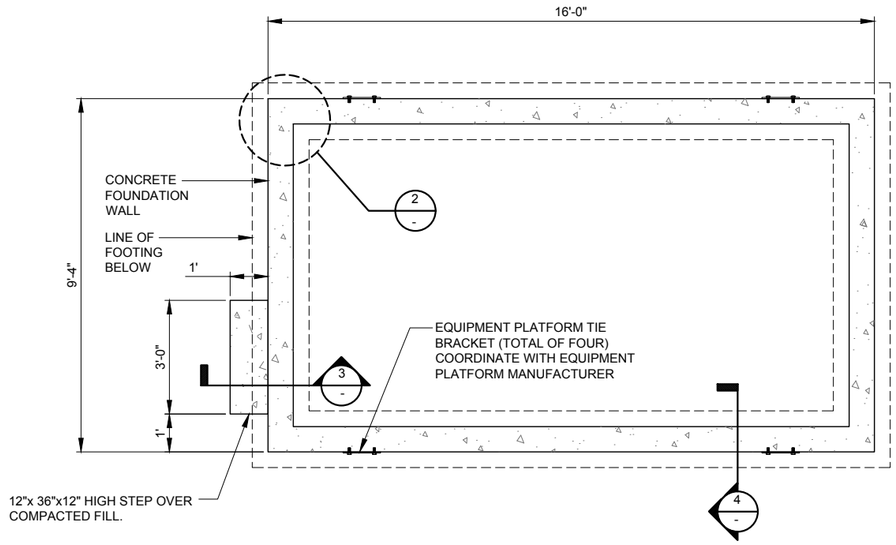

1 EQUIPMENT ENCLOSURE FOUNDATION PLAN
N.T.S.

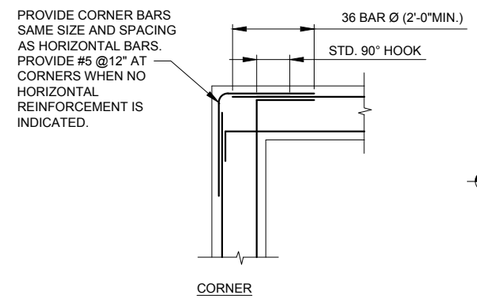

2 CONCRETE WALL REINFORCEMENT DETAILS
N.T.S.

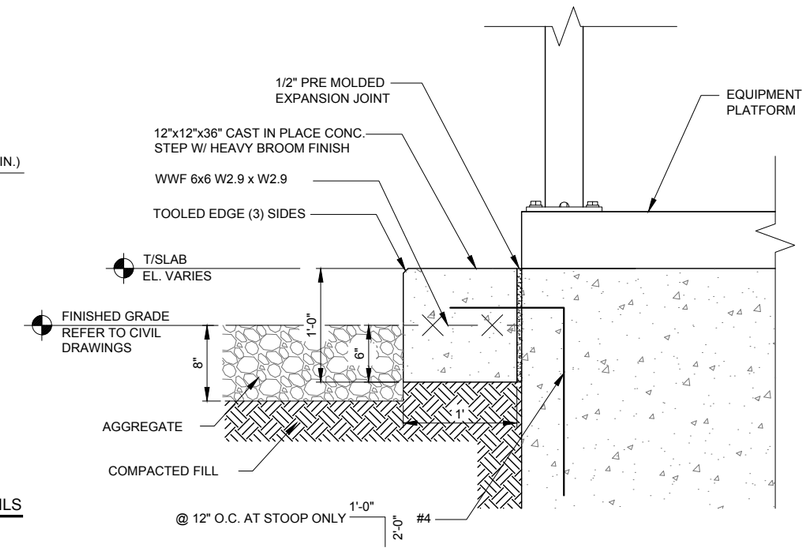

3 STEP DETAIL
N.T.S.

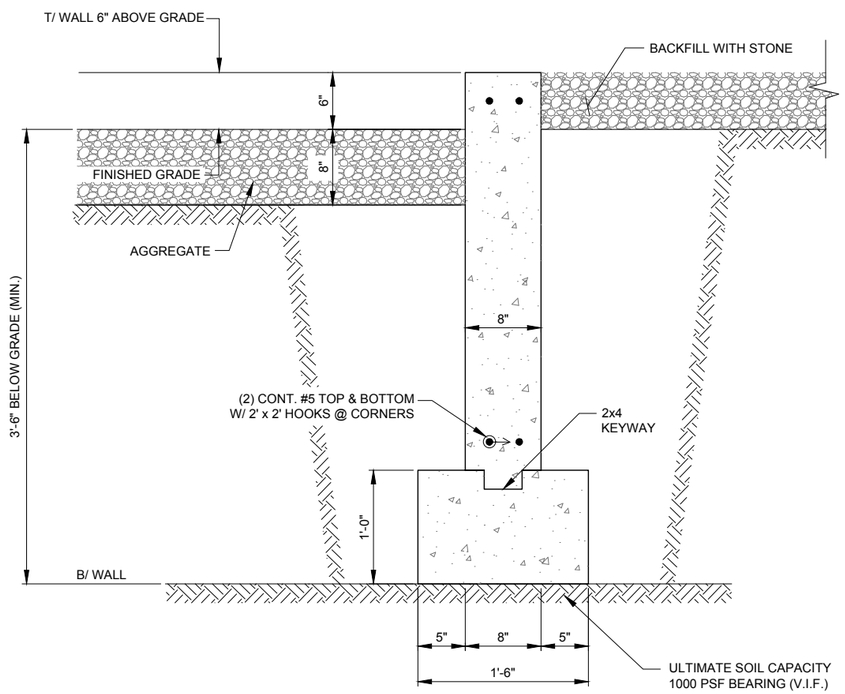

4 FOUNDATION WALL SECTION
SCALE: N.T.S.

NOTE:
LOCALIZED AREAS OF SOFT OR LOOSE MATERIALS MAY BE ENCOUNTERED AT THE PROPOSED BEARING ELEVATION. THE SOILS MAY REQUIRE COMPACTION USING A PLATE COMPACTOR IN THE FOOTING TRENCH IF FIELD CONDITIONS INDICATE LOOSE GRANULAR SOILS. THE SOILS MAY REQUIRE REMOVAL AND REPLACEMENT WITH AN APPROVED ENGINEERED FILL. FOUNDATION DEPTH AND OVER DIG REQUIREMENTS SHALL BE VERIFIED WITH THE RECOMMENDATIONS OF THE GEOTECHNICAL REPORT AND INCLUDED IN THE BID BEFORE CONSTRUCTION. THE EVALUATION OF THE SUB GRADE AND SELECTION OF FILL MATERIALS SHALL BE MONITORED AND TESTED BY A QUALIFIED REPRESENTATIVE OF THE SOILS ENGINEER.

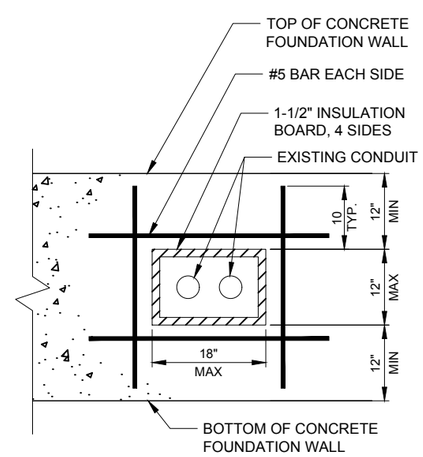

5 SLEEVE DETAIL (IF APPLICABLE)
N.T.S.

A. EQUIPMENT PLATFORM FOUNDATION

1. REFER TO CIVIL DRAWINGS FOR ORIENTATION OF THE FOUNDATIONS.
2. EQUIPMENT ENCLOSURE FOUNDATION IS DESIGNED FOR THE FOLLOWING LOADS:
   ROOF LIVE LOAD: 81 PSF
   FLOOR LIVE LOAD: 986 PSF
3. THE CONTRACTOR SHALL NOTIFY THE CLIENT'S GEOTECHNICAL ENGINEER TO COORDINATE HAVING A FIELD REPRESENTATIVE ON SITE FOR TESTING AND INSPECTION.
4. FOOTINGS SHALL BEAR ON VIRGIN SOIL OR COMPACTED FILL MATERIAL CAPABLE OF SUPPORTING A MINIMUM SOIL BEARING PRESSURE OF 1000 PSF MINIMUM.
5. SUBGRADE PREPARATION:
   A. REMOVE ALL SOILS CONTAINING TOPSOIL: ORGANIC MATERIALS, AND/OR FILL MATERIALS FROM WITHIN AREA OF ENCLOSURE FOUNDATION.
   B. PROOF ROLL RESULTING SUBGRADE WITH A HEAVILY LOADED SINGLE AXLE ROLLER OR SIMILAR VEHICLE. (20 TON LOAD). CONTRACTOR SHALL UNDERCUT AND REPLACE WITH ENGINEERED FILL. ALL LOOSE SOFT OR UNSTABLE AREAS REVEALED DURING PROOFROLLING AS DIRECTED BY THE TESTING AGENCY. CONTRACTOR SHALL INCLUDE ANTICIPATED UNDERCUT AND REPLACEMENT AS INDICATED IN THE GEOTECHNICAL REPORT AS PART OF THE BID.
   C. BACKFILL AND COMPACT THE AREA WITHIN THE PLATFORM FOUNDATION. BETWEEN RESULTANT SUBGRADE AND FOUNDATION WALL WITH APPROVED GRANULAR MATERIAL.
6. FOUNDATION WALLS SHALL BE BACKFILLED EVENLY ON EACH SIDE OF THE WALL OR WALLS SHALL BE ADEQUATELY BRACED BY THE CONTRACTOR UNTIL FOUNDATION WALL HAS BEEN PLACED AND CURED FOR 72 HOURS MINIMUM.
7. PLATFORM SHALL NOT BE SET UNTIL FOUNDATION WALL HAS BEEN CURED FOR 72 HOURS MINIMUM.
8. CONTRACTOR TO ENSURE FOUNDATION WALL ARE POURED TO MEET FLATNESS LEVEL TOLERANCES AS INDICATED IN ACI 4.5.6 AND 4.5.7.

B. EQUIPMENT PLATFORM

THE EQUIPMENT PLATFORM IS A PRE-FABRICATED PLATFORM MANUFACTURED BY SABRE INDUSTRIES, BOSSIER CITY, LA 71111

THE EQUIPMENT PLATFORM SHALL BE FURNISHED AND INSTALLED BY THE OWNER UNDER SEPARATE CONTRACT PER THE OWNER AND MANUFACTURER SPECIFICATIONS.

C. CONCRETE NOTES

1. ALL CONCRETE WORK SHALL CONFORM TO THE REQUIREMENTS OF ACI 318 AND ACI 301, LATEST EDITION. THESE DOCUMENTS SHALL BE AVAILABLE IN THE FIELD OFFICE.
2. EXCEPT WHERE OTHERWISE INDICATED, CONCRETE SHALL BE NORMAL WEIGHT AND WITH MINIMUM 28-DAY COMPRESSIVE STRENGTHS OF F'c=4000 PSI. ALL EXTERIOR EXPOSED CONCRETE SHALL BE AIR ENTRAINED WITH 6% AIR CONENT.
3. REINFORCING BARS SHALL CONFORM TO ASTM A615, GRADE 60. ALL WELDED WIRE FABRIC SHALL CONFORM TO ASTM A185.
4. UNLESS NOTED OTHERWISE, ALL SLABS-ON GRADE SHALL BE REINFORCED WITH ONE (1) LAYER OF 6X6 W2.1xW2.1 W.W.F.

OPERATES 24 HOURS A DAY 365 DAYS A YEAR

Call Before You Dig
JULIE
ILLINOIS ONE CALL SYSTEM
CALL JULIE TOLL FREE
1(800) 892-0123
48 HOURS BEFORE YOU DIG

CHICAGO SMSA
limited partnership
d/b/a VERIZON WIRELESS

TERRA CONSULTING GROUP, LTD.
600 BUSSE HIGHWAY
PARK RIDGE, IL 60068
PH: 847-698-6400
FAX: 847-698-6401

REVISIONS

NO.	DESCRIPTION	DATE	BY
3	FINAL PENDING FIBER	08/21/17	DMS
4	UPDATE WITH NEW ECR	08/31/17	JTM
5	UPDATE WITH NEW LAYOUT	09/06/17	DMS
6	FINALS WITH FINER	10/20/17	RA
7	ADDITION OF LANDSCAPING PLAN	12/29/17	JTM
8	UPDATE PER GAS COORDINATION	01/31/18	DMS
9	REVISED LANDSCAPE PLAN PER VILLAGE	04/05/18	JTM

LOC. # 311466

W 151ST
& S 80TH

15100 S 80TH AVE
ORLAND PARK, IL 60462

DRAWN BY:	PP
CHECKED BY:	TAZ
DATE:	07/23/15
PROJECT #:	33-1466

SHEET TITLE
PLATFORM FOUNDATION PLAN

SHEET NUMBER
C-5

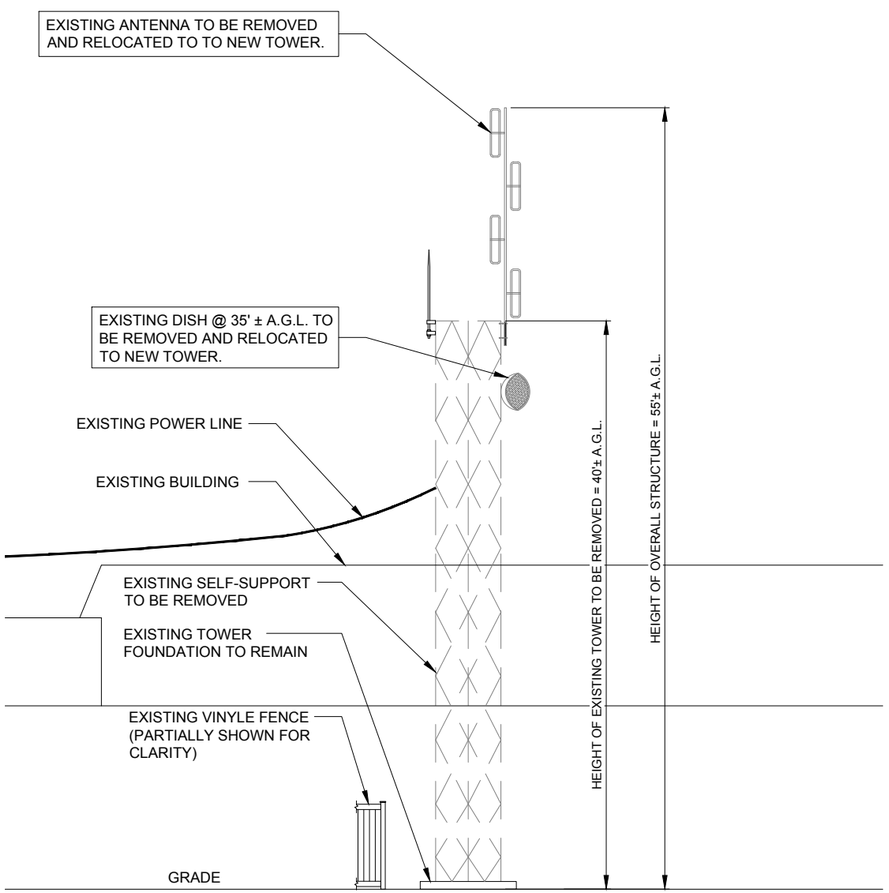

1 EXISTING SITE ELEVATION
SCALE: 3/16" = 1'-0"

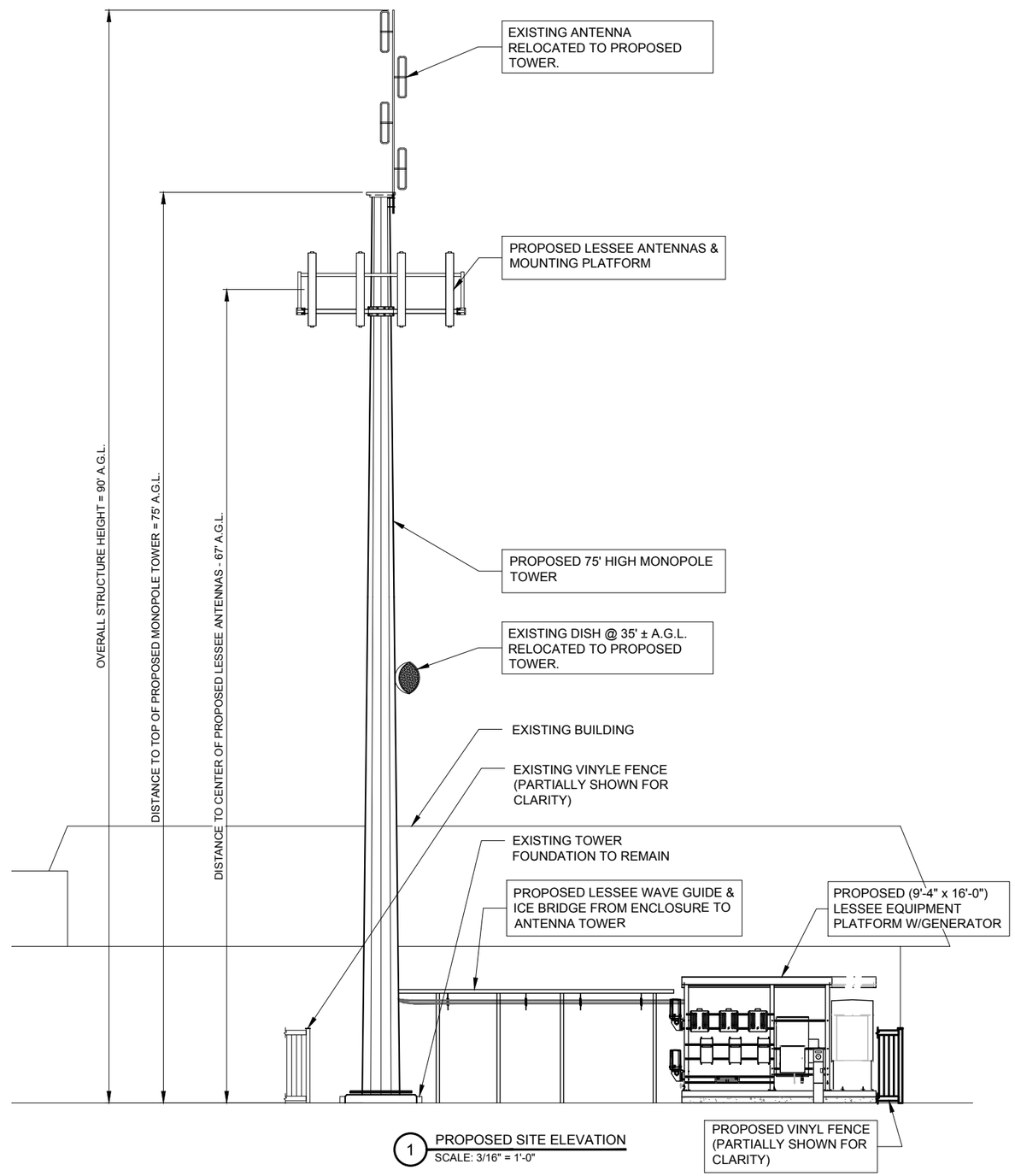

1 PROPOSED SITE ELEVATION
SCALE: 3/16" = 1'-0"

0 1/2" 1" 2"
SCALE: 3/16" = 1'

24" x 36" PRINT IS THE FULL SCALE FORMAT. ANY SIZE OTHER THAN THAT IS AT REDUCED SCALE.

CHICAGO SMSA
limited partnership
d/b/a VERIZON WIRELESS

TERRA CONSULTING GROUP, LTD.
600 BUSSE HIGHWAY
PARK RIDGE, IL 60068
PH: 847-698-6400
FAX: 847-698-6401

REVISIONS

NO.	DESCRIPTION	DATE	BY
3	FINAL PENDING FIBER	08/21/17	DMS
4	UPDATE WITH NEW ECR	08/31/17	JTM
5	UPDATE WITH NEW LAYOUT	09/06/17	DMS
6	FINALS WITH FINER	10/20/17	RA
7	ADDITION OF LANDSCAPING PLAN	12/29/17	JTM
8	UPDATE PER GAS COORDINATION	01/31/18	DMS
9	REVISED LANDSCAPE PLAN PER VILLAGE	04/05/18	JTM

LOC. # 311466

W 151ST
& S 80TH

15100 S 80TH AVE
ORLAND PARK, IL 60462

DRAWN BY:	PP
CHECKED BY:	TAZ
DATE:	07/23/15
PROJECT #:	33-1466

SHEET TITLE
SITE ELEVATION

SHEET NUMBER
ANT-1

EQUIPMENT CHANGE REQUEST FORM- ECR

Cell Name	151st St & 80th Ave				Cell ID	
Location Number		RF Engineer	Jeremy Litz		Address	15100 S 80th St
Date of Request	8/31/2017	Market	HH		City/State/Zip	Orland Park/IL/60462

PROPOSED CONFIGURATION — Configuration: **Option-A2**

Sector	Pos	Port	RF Path	Antenna Manufacturer	Antenna Model	Antenna Serial Number	Centerline	Azimuth	Variable Tilt	Mechanical Tilt	Action
Alpha	A1	L1 (-45)	LTE C - RxTx0	CommScope	SBNHH-1D65B		67	25	2	0	Change-Install
		L2 (+45)	LTE C - RxTx1								
		H1 (-45)	AWS - RxTx0						0		
		H2 (+45)	AWS - RxTx1								
	A2	L1 (-45)	Unused at this time								
		L2 (+45)	Unused at this time								
		H1 (-45)	Unused at this time								
		H2 (+45)	Unused at this time								
	A3	L1 (-45)	Unused at this time								
		L2 (+45)	Unused at this time								
		H1 (-45)	Unused at this time								
		H2 (+45)	Unused at this time								
	A4	L1 (-45)	Unused at this time	CommScope	SBNHH-1D65B		67	25	2	0	Change-Install
		L2 (+45)	Unused at this time								
		H1 (-45)	PCS Future - RxTx0						0		
		H2 (+45)	PCS Future - RxTx1								
Beta	B1	L1 (-45)	LTE C - RxTx0	CommScope	SBNHH-1D65B		67	140	4	0	Change-Install
		L2 (+45)	LTE C - RxTx1								
		H1 (-45)	AWS - RxTx0						1		
		H2 (+45)	AWS - RxTx1								
	B2	L1 (-45)	Unused at this time								
		L2 (+45)	Unused at this time								
		H1 (-45)	Unused at this time								
		H2 (+45)	Unused at this time								
	B3	L1 (-45)	Unused at this time								
		L2 (+45)	Unused at this time								
		H1 (-45)	Unused at this time								
		H2 (+45)	Unused at this time								
	B4	L1 (-45)	Unused at this time	CommScope	SBNHH-1D65B		67	140	4	0	Change-Install
		L2 (+45)	Unused at this time								
		H1 (-45)	PCS Future - RxTx0						1		
		H2 (+45)	PCS Future - RxTx1								
GAMMA	G1	L1 (-45)	LTE C - RxTx0	CommScope	SBNHH-1D65B		67	270	4	0	Change-Install
		L2 (+45)	LTE C - RxTx1								
		H1 (-45)	AWS - RxTx0						1		
		H2 (+45)	AWS - RxTx1								
	G2	L1 (-45)	Unused at this time								
		L2 (+45)	Unused at this time								
		H1 (-45)	Unused at this time								
		H2 (+45)	Unused at this time								
	G3	L1 (-45)	Unused at this time								
		L2 (+45)	Unused at this time								
		H1 (-45)	Unused at this time								
		H2 (+45)	Unused at this time								
	G4	L1 (-45)	Unused at this time	CommScope	SBNHH-1D65B		67	270	4	0	Change-Install
		L2 (+45)	Unused at this time								
		H1 (-45)	PCS Future - RxTx0						1		
		H2 (+45)	PCS Future - RxTx1								

Comments

1 PROPOSED ANTENNA SCHEDULE
N.T.S.

ESTIMATED MAIN LINE HYBRID LENGTH

ANTENNA CENTERLINE (±)	ICE BRIDGE LENGTH (±)	SHELTER (±)	TOTAL (±)
67'	13'	15'	100'

Proposed

	Location	Manufacturer	Component Model	Count	Action
Passive Components	Top (Platform)				
	Bottom (Shelter)				
	Top (Platform)	Ericsson	2212 - AWS	6	Install
	Top (Platform)	Ericsson	2212 - PCS	6	Install
	Top (Platform)				
	Top (Platform)	Raycap	RCMDC-3315-PF-48	3	Install
	Bottom (Shelter)	Raycap	RCMDC-3315-PF-48	3	Install
	Bottom (Shelter)	CommScope	CBC78T-DS-43	6	Install

	Sector	Coax Manufacturer	Type	Size	Count	Action
Coax	Alpha	ANDREW		1 5/8	4	Install
	Beta	ANDREW		1 5/8	4	Install
	Gamma	ANDREW		1 5/8	4	Install
	AWS	Andrew	RFF-16SM-808-418-APE	1 5/8	3	Install

Comments

2 COMBINER CABLE DATA INFORMATION
N.T.S.

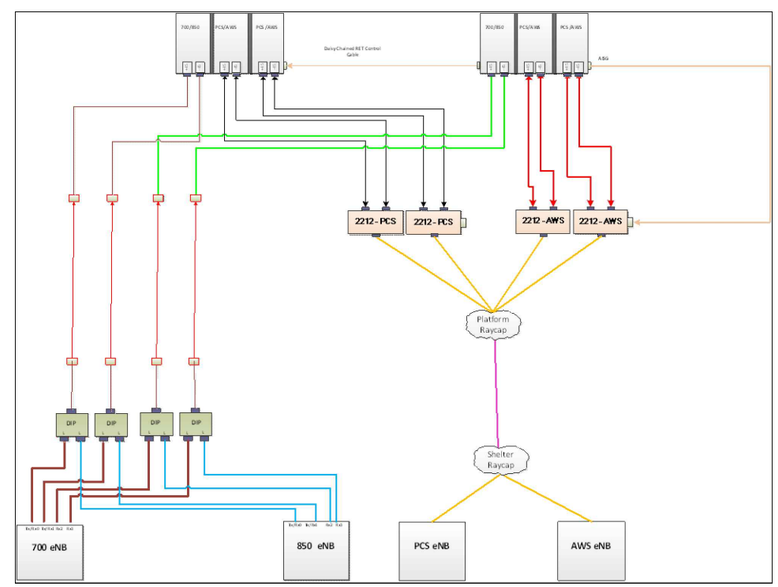

3 CABLE DIAGRAM
N.T.S.

CHICAGO SMSA
limited partnership
d/b/a VERIZON WIRELESS

TERRA CONSULTING GROUP, LTD.
600 BUSSE HIGHWAY
PARK RIDGE, IL 60068
PH: 847-698-6400
FAX: 847-698-6401

REVISIONS

NO.	DESCRIPTION	DATE	BY
3	FINAL PENDING FIBER	08/21/17	DMS
4	UPDATE WITH NEW ECR	08/31/17	JTM
5	UPDATE WITH NEW LAYOUT	09/08/17	DMS
6	FINALS WITH FINER	10/20/17	RA
7	ADDITION OF LANDSCAPING PLAN	12/29/17	JTM
8	UPDATE PER GAS COORDINATION	01/31/18	DMS
9	REVISED LANDSCAPE PLAN PER VILLAGE	04/05/18	JTM

LOC. # 311466

W 151ST
& S 80TH

15100 S 80TH AVE
ORLAND PARK, IL 60462

DRAWN BY:	PP
CHECKED BY:	TAZ
DATE:	07/23/15
PROJECT #:	33-1466

SHEET TITLE
ANTENNA INFORMATION

SHEET NUMBER
ANT-2

SPECIFICATIONS	DC SURGE PROTECTION FOR RRU/INTEGRATED ANTENNA RADIO HEAD
APPLICATION:	TOWER / BASE / ROOFTOP / ROOFTOP DISTRIBUTION MODELS
WEIGHT:	32LBS (14.51 KG)

[mm]
INCHES

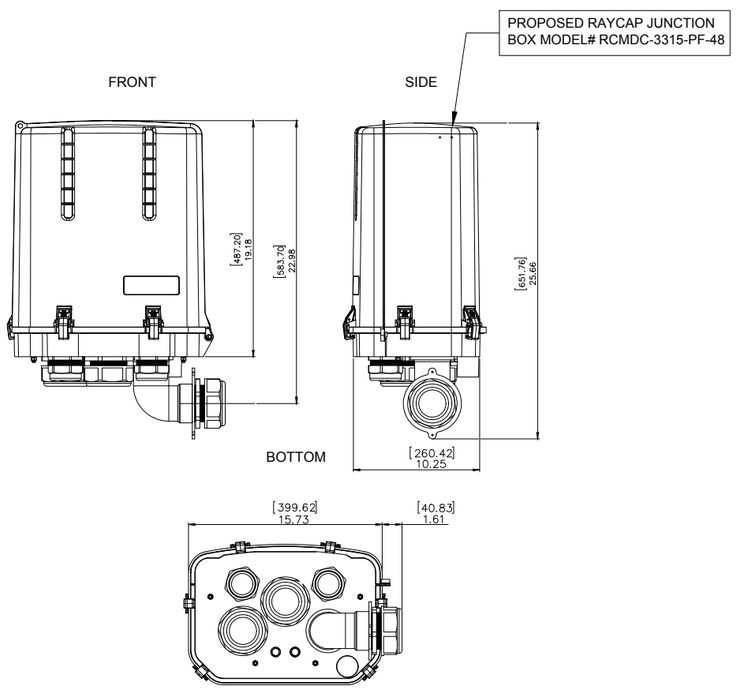

1 RAYCAP JUNCTION BOX DETAIL
SCALE: N.T.S.

NOTE: EACH SECTOR BAR TO HAVE TO HAVE SEPARATE GROUND LEAD TO COLLAR MOUNT

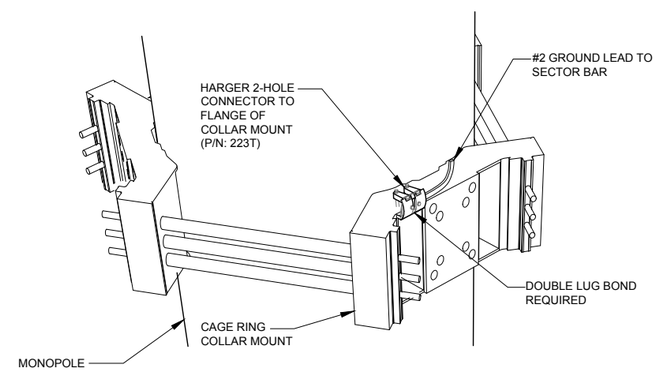

2 MONOPOLE GROUND AT ANTENNA LEVEL
SCALE: N.T.S.

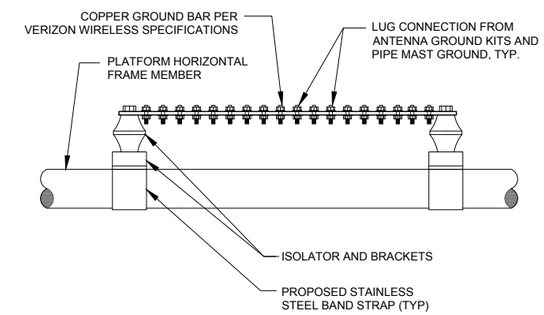

3 GROUND BAR AT SECTOR
N.T.S.

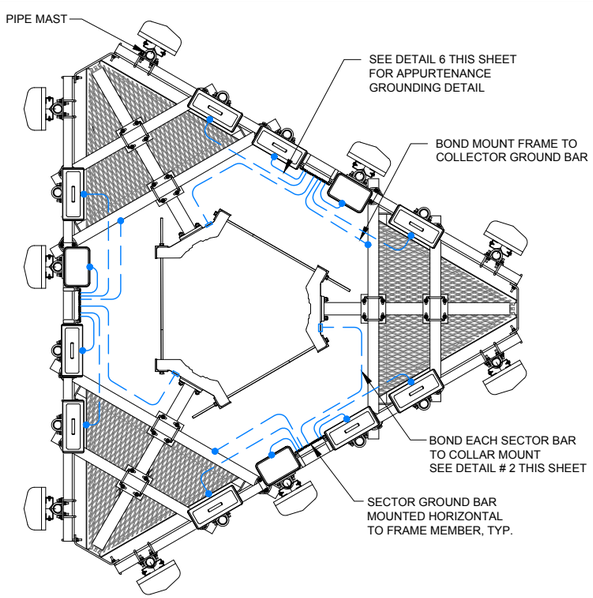

4 EQUIPMENT GROUNDING AT ANTENNA ELEVATION
N.T.S.

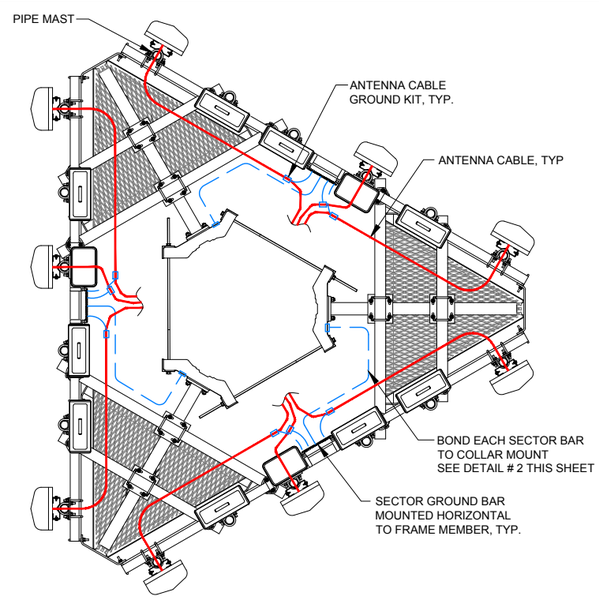

5 ANTENNA CABLE GROUNDING AT ANTENNA ELEVATION
N.T.S.

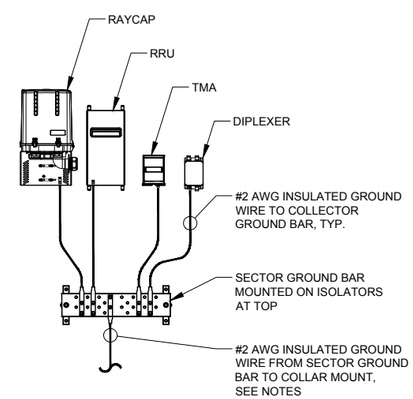

THIS DETAIL IS CONCEPTUAL TO DEMONSTRATE GROUNDING AT THE ANTENNA LEVEL. VERIFY EQUIPMENT, MOUNTING FRAME, AND AZIMUTH WITH ANT-1 SHEET & ECR.

6 TYPICAL APPURTENANCE GROUNDING AT ANTENNA LEVEL
N.T.S.

APPROVED UL LISTED GROUND CLAMPS	
APPLICATION	UL LISTED HARGER PART #
METAL FLANGE	213, 213T, 213TTP
PIPE MEMBER	CPC SERIES (SIZED TO FIT DIAMETER OF PIPE)
LARGER PIPE MEMBER	UPC SERIES (UNIVERSAL PIPE CLAMP) SIZED TO FIT DIAMETER OF PIPE
TO COLLAR MOUNT	233T

NOTES:

1. THE BOND BETWEEN THE SECTOR BAR AND THE TOWER IS TO BE MECHANICALLY BONDED TO COLLAR MOUNT. THE MECHANICAL BOND IS TO BE A UL APPROVED MECHANICAL CONNECTION CLAMP.
2. GROUND CONNECTIONS MUST BE DOUBLE HOLE CONNECTION. SPECIAL EXCEPTION ONLY TO EQUIPMENT THAT WILL NOT ALLOW FOR A DOUBLE HOLE CONNECTION.

CHICAGO SMSA
limited partnership
d/b/a VERIZON WIRELESS

TERRA CONSULTING GROUP, LTD.
600 BUSSE HIGHWAY
PARK RIDGE, IL 60068
PH: 847-698-6400
FAX: 847-698-6401

REVISIONS

NO.	DESCRIPTION	DATE	BY
3	FINAL PENDING FIBER	08/21/17	DMS
4	UPDATE WITH NEW ECR	08/31/17	JTM
5	UPDATE WITH NEW LAYOUT	09/06/17	DMS
6	FINALS WITH FINER	10/20/17	RA
7	ADDITION OF LANDSCAPING PLAN	12/29/17	JTM
8	UPDATE PER GAS COORDINATION	01/31/18	DMS
9	REVISED LANDSCAPE PLAN PER VILLAGE	04/05/18	JTM

LOC. # 311466

W 151ST
& S 80TH

15100 S 80TH AVE
ORLAND PARK, IL 60462

DRAWN BY:	PP
CHECKED BY:	TAZ
DATE:	07/23/15
PROJECT #:	33-1466

SHEET TITLE
SITE DETAILS

SHEET NUMBER
ANT-3

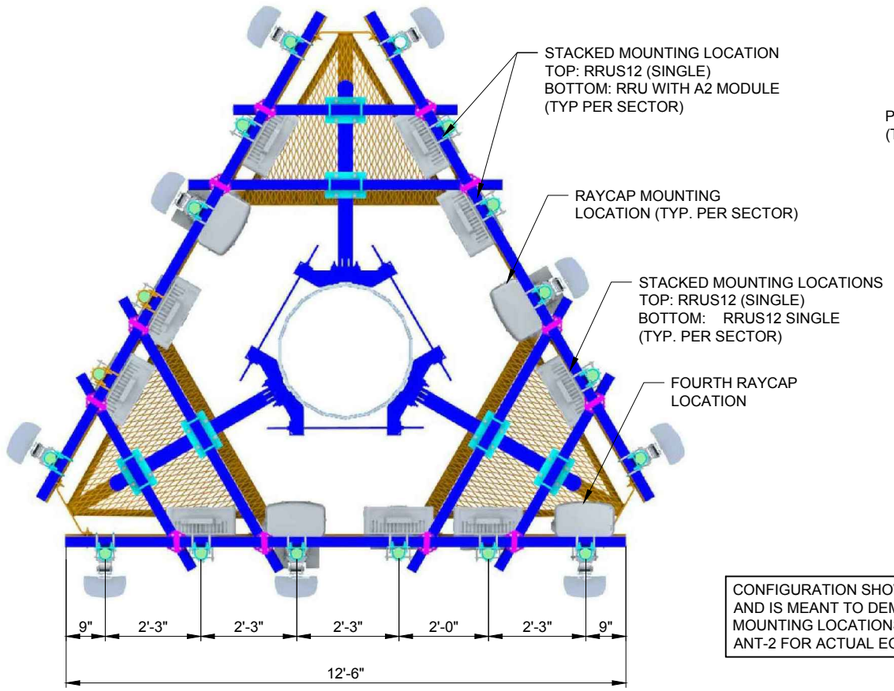

1 PLAN VIEW
SCALE: N.T.S.

CONFIGURATION SHOWN IS CONCEPTUAL, AND IS MEANT TO DEMONSTRATE REQUIRED MOUNTING LOCATIONS. REFER TO SHEET ANT-2 FOR ACTUAL EQUIPMENT QUANTITIES

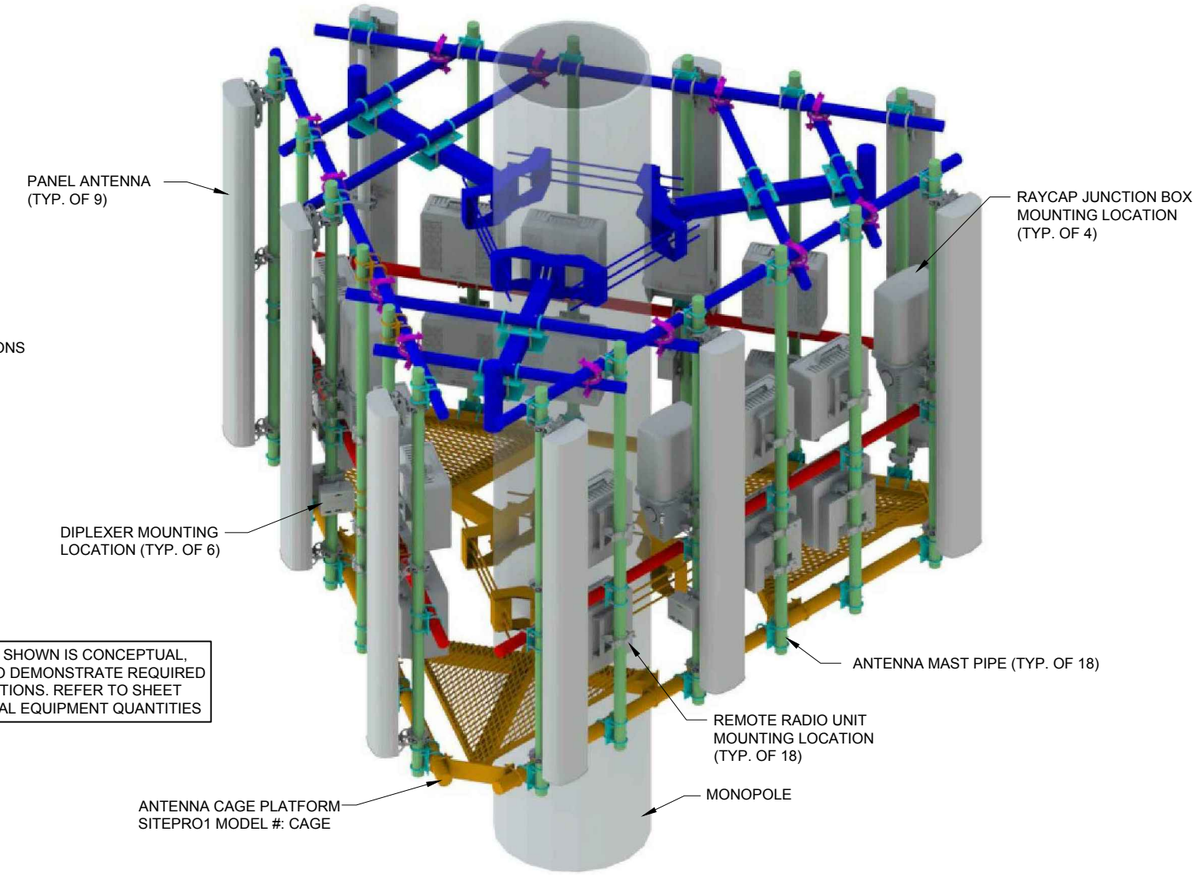

2 ISOMETRIC VIEW
SCALE: N.T.S.

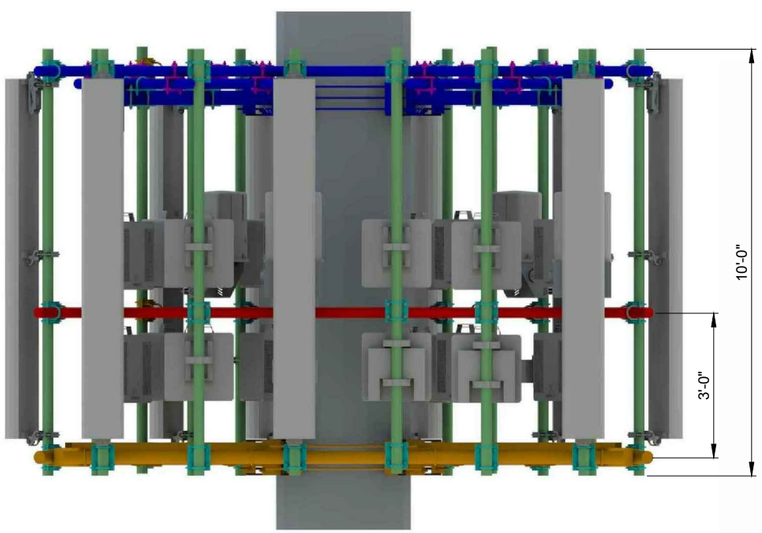

3 FRONT VIEW
SCALE: N.T.S.

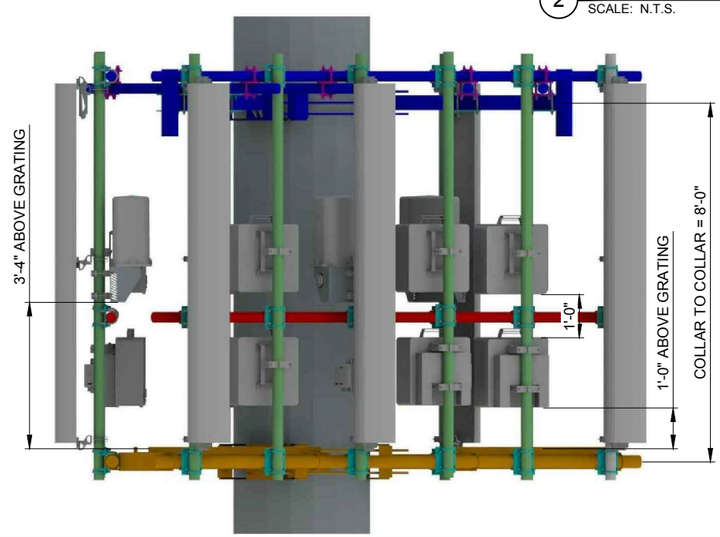

4 SIDE VIEW
SCALE: N.T.S.

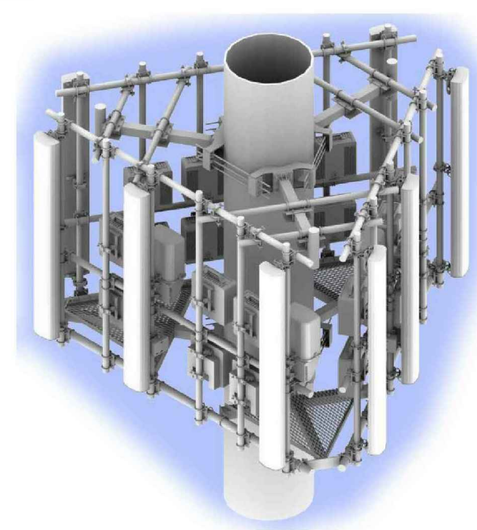

5 ISOMETRIC RENDERING
SCALE: N.T.S.

CHICAGO SMSA
limited partnership
d/b/a VERIZON WIRELESS

TERRA CONSULTING GROUP, LTD.
600 BUSSE HIGHWAY
PARK RIDGE, IL 60068
PH: 847-698-6400
FAX: 847-698-6401

REVISIONS

NO	DESCRIPTION	DATE	BY
3	FINAL PENDING FIBER	08/21/17	DMS
4	UPDATE WITH NEW ECR	08/31/17	JTM
5	UPDATE WITH NEW LAYOUT	09/06/17	DMS
6	FINALS WITH FINER	10/20/17	RA
7	ADDITION OF LANDSCAPING PLAN	12/29/17	JTM
8	UPDATE PER GAS COORDINATION	01/31/18	DMS
9	REVISED LANDSCAPE PLAN PER VILLAGE	04/05/18	JTM

LOC. # 311466

W 151ST
& S 80TH

15100 S 80TH AVE
ORLAND PARK, IL 60462

DRAWN BY:	PP
CHECKED BY:	TAZ
DATE:	07/23/15
PROJECT #:	33-1466

SHEET TITLE
ANTENNA MOUNTING DETAILS

SHEET NUMBER
ANT-3A

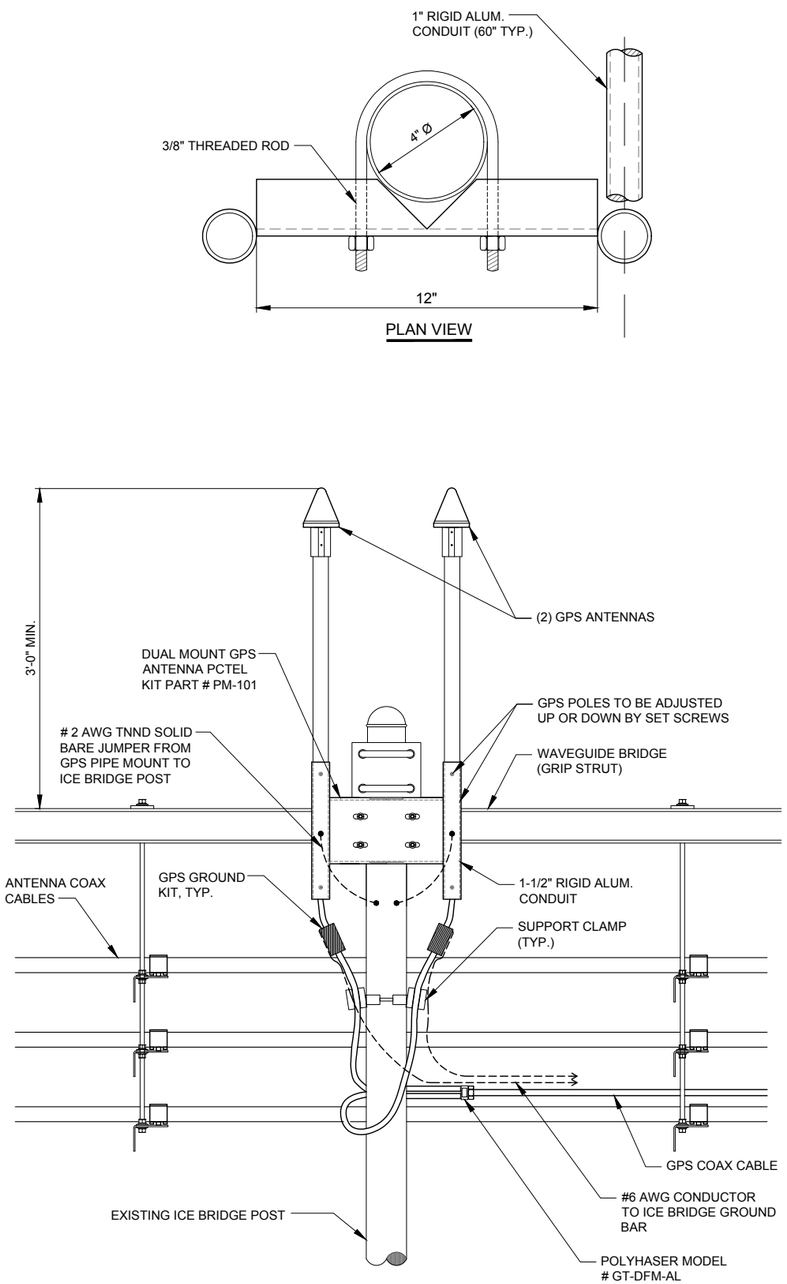

1 GPS MOUNTING DETAIL
N.T.S.

NOTE:
INSTALL EACH GPS ON THE CLOSEST ICE BRIDGE POSTS TO SHELTER (TYP. AT 2 LOCATIONS).

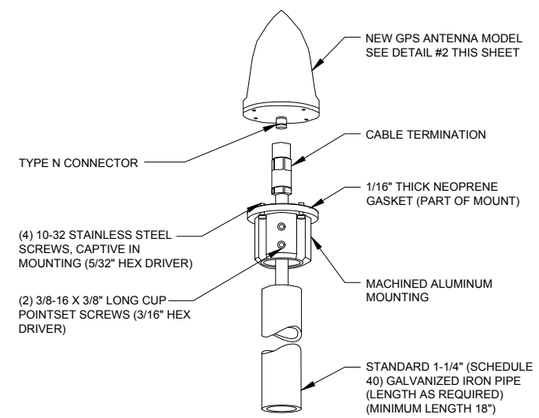

2 TYPICAL GPS DETAIL
N.T.S.

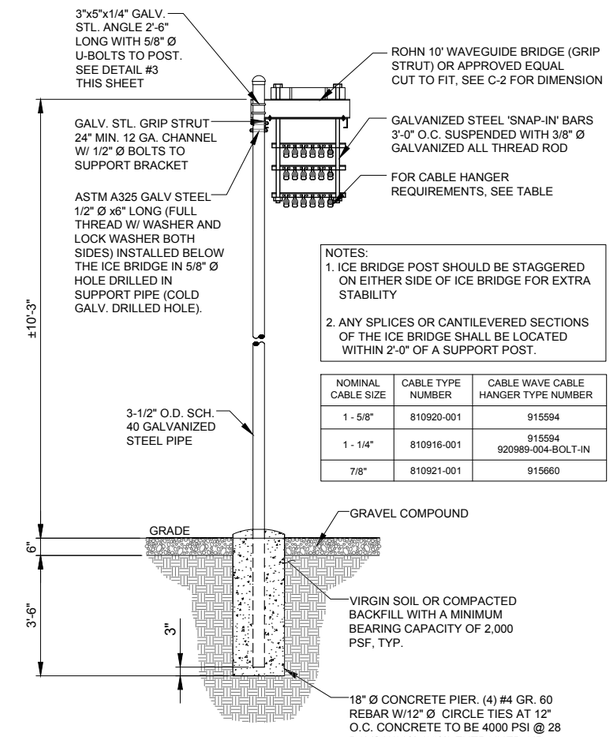

NOTES:
1. ICE BRIDGE POST SHOULD BE STAGGERED ON EITHER SIDE OF ICE BRIDGE FOR EXTRA STABILITY
2. ANY SPLICES OR CANTILEVERED SECTIONS OF THE ICE BRIDGE SHALL BE LOCATED WITHIN 2'-0" OF A SUPPORT POST.

NOMINAL CABLE SIZE	CABLE TYPE NUMBER	CABLE WAVE CABLE HANGER TYPE NUMBER
1 - 5/8"	810920-001	915594
1 - 1/4"	810916-001	915594 920989-004-BOLT-IN
7/8"	810921-001	915660

3 ICE BRIDGE DETAIL
N.T.S.

NOTES:
1. DO NOT INSTALL CABLE GROUND KIT AT A BEND AND ALWAYS DIRECT GROUND WIRE DOWN TO GROUND BAR.
2. THIS DETAIL IS TYPICAL FOR EACH CABLE WHERE IT IS SPECIFIED TO BE GROUNDED
3. CABLE TO BE GROUNDED AT ANTENNA LEVEL AND PRIOR TO ENTERING SHELTER ENTRY PANEL.
4. CABLE ALSO TO BE GROUNDED TO GROUND BAR AT TOWER BASE IF APPLICABLE.
5. USE ONLY TIN PLATED GROUNDING KITS.

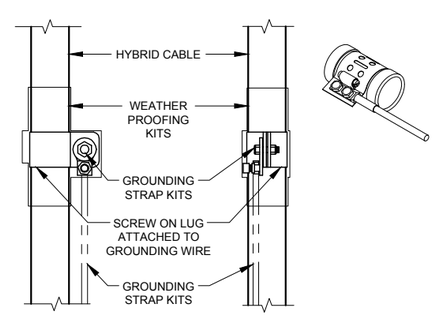

4 COAX/ HYBRID GROUND KIT DETAIL
N.T.S.

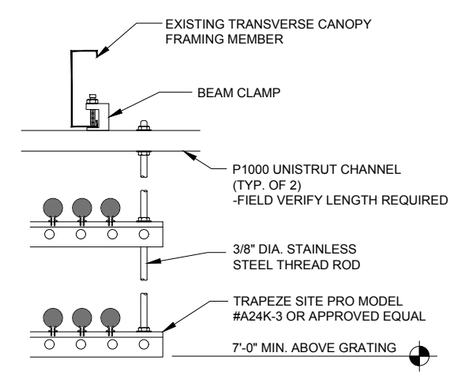

4 COAX TRAPEZE DETAIL (AT PLATFORM)
N.T.S.

CHICAGO SMSA
limited partnership
d/b/a VERIZON WIRELESS

TERRA CONSULTING GROUP, LTD.
600 BUSSE HIGHWAY
PARK RIDGE, IL 60068
PH: 847-698-6400
FAX: 847-698-6401

REVISIONS

NO.	DESCRIPTION	DATE	BY
3	FINAL PENDING FIBER	08/21/17	DMS
4	UPDATE WITH NEW ECR	08/31/17	JTM
5	UPDATE WITH NEW LAYOUT	09/06/17	DMS
6	FINALS WITH FINER	10/20/17	RA
7	ADDITION OF LANDSCAPING PLAN	12/29/17	JTM
8	UPDATE PER GAS COORDINATION	01/31/18	DMS
9	REVISED LANDSCAPE PLAN PER VILLAGE	04/05/18	JTM

LOC. # 311466

W 151ST
& S 80TH

15100 S 80TH AVE
ORLAND PARK, IL 60462

DRAWN BY:	PP
CHECKED BY:	TAZ
DATE:	07/23/15
PROJECT #:	33-1466

SHEET TITLE
SITE DETAILS

SHEET NUMBER
ANT-4

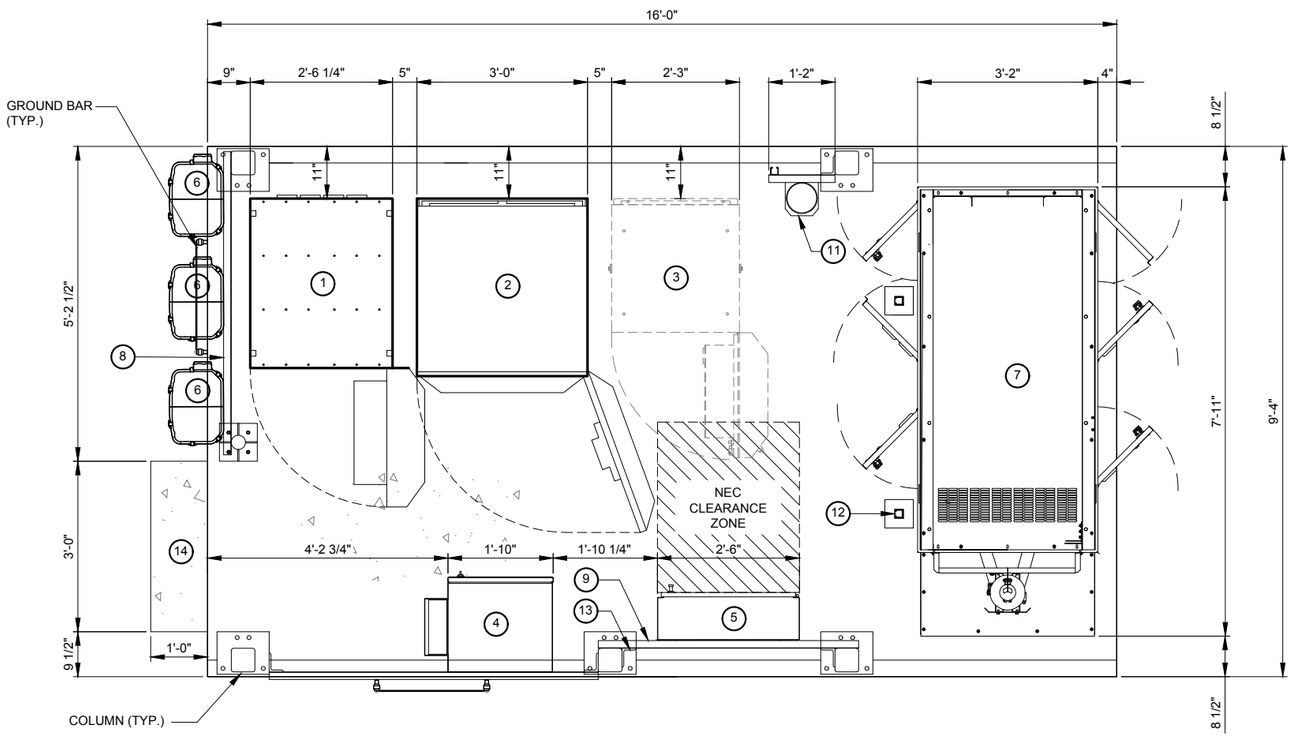

1 EQUIPMENT SKID - LAYOUT PLAN
SCALE: 3/4" = 1'-0"

KEY NOTES

1. COMMSCOPE RBA72-30 EQUIPMENT CABINET (72"x31.3"x44")
2. COMMSCOPE RBA72-36 BATTERY CABINET (72"x36.3"x40.6")
3. ERICSSON 61220 ENODE B CABINET IF REQUIRED (6'-6"x2'-3"x2'x3")
4. CHARLES CUBE RL1003 FIBER ENCLOSURE
5. INTEGRATED LOAD CENTER
6. RAYCAP SURGE SUPPRESSION UNIT (VERIFY QUANTITY AND LOCATION WITH CONSTRUCTION DRAWINGS AND LOCATION OF ICE BRIDGE)
7. GENERATOR MODEL #; LP/NATURAL GAS OUTDOOR - 35KW-GENERAC SGNG SEE EX-1 PAGE FOR GENERATOR DETAILS
8. UNI-STRUT (P1000T) OVP MOUNTING RACK
9. UNI-STRUT (P1000T) ILC MOUNTING RACK
10. 3" O.D. PIPE W/ 8"x8" MOUNTING PLATE
11. FIRE EXTINGUISHER BRACKET ON UNI-STRUT (P1000T) SUPPORT
12. UNI-STRUT (P1000T) SUPPORT BASE FOR CONDUITS BETWEEN ILC AND GENERATOR.
13. 3"x4"x3/8" THK. SLOTTED ANGLE
14. 12"x36" CONCRETE STEP

NOTES:

1. EQUIPMENT SKID PRE MANUFACTURED BY OTHERS
2. THIS IS UNMANNED STORAGE AND EQUIPMENT SKID ONLY.
3. SKID SHALL BE PLACED ACCORDING TO STATE AND LOCAL CODE FROM ANY PROPERTY LINE, INTERIOR LOT LINE OR ANY OTHER BUILDING.
4. ALL ITEMS NOTED AS "FIELDWORK" SHALL BE INSTALLED AND TESTED AT THE FACTORY THEN REMOVED FOR TRANSPORT AND REINSTALLED AT THE FINAL SITE.
5. SKID NOT DESIGNED FOR INSTALLATION IN A FLOOD PRONE AREA.
6. FIRE EXTINGUISHER INSTALLED BY OTHERS WHEN NOT SUPPLIED BY SABRE.
7. THIS SKID DOES NOT CONTAIN PLUMBING FACILITIES.
8. THIS ENCLOSURE IS CLASSIFIED AS USE S-2 (IBC, FBC), U (OBC)
   2006-2015 INTERNATIONAL BUILDING CODE
   2009-2012 UNIFORM MECHANICAL CODE
   2006-2015 INTERNATIONAL MECHANICAL CODE
   2004 CHICAGO BUILDING CODE
9. DESIGN PARAMETERS
   USE GROUP: S-2 (IBC, FBC)
   U (OBC)
   CONSTRUCTION TYPE: V-B (IBC, FBC)

   OCCUPANCY CATEGORY: II

   ROOF LIVE LOAD: 81 PSF

   FLOOR LIVE LOAD: 986 PSF

   GROUND SNOW LOAD: 96 PSF (N/A FOR FBC 2014)

   WIND SPEED: 150 MPH/EXPOSURE C

   SEISMIC ZONE FOR SBC & UBC: 4
   SEISMIC DESIGN CATEGORY FOR IBC: E (IBC)
   USE GROUP-III (OBC)
   SITE CLASS-D (OBC)
   BULLET RESISTANCE LEVEL 4 FOR 4" CONCRETE PER IBC
   CONCRETE f'c: 5000 PSI AT 28 DAYS
   CONCRETE UNIT WEIGHT: 115 PCF
10. SKID AND ASSOCIATED EQUIPMENT IS PROVIDED BY OWNER UNDER SEPARATE CONTRACT. EQUIPMENT SKID INFORMATION INDICATED HEREIN IS PROVIDED FOR REFERENCE ONLY AND IS TAKEN FROM MANUFACTURER'S AVAILABLE DATA. REFER TO CIVIL, STRUCTURAL AND ELECTRICAL DRAWINGS FOR WORK TO BE PERFORMED UNDER THIS CONTRACT.

CHICAGO SMSA
limited partnership
d/b/a VERIZON WIRELESS

TERRA CONSULTING GROUP, LTD.
600 BUSSE HIGHWAY
PARK RIDGE, IL 60068
PH: 847-698-6400
FAX: 847-698-6401

REVISIONS

NO.	DESCRIPTION	DATE	BY
3	FINAL PENDING FIBER	08/21/17	DMS
4	UPDATE WITH NEW ECR	08/31/17	JTM
5	UPDATE WITH NEW LAYOUT	09/06/17	DMS
6	FINALS WITH FINER	10/20/17	RA
7	ADDITION OF LANDSCAPING PLAN	12/29/17	JTM
8	UPDATE PER GAS COORDINATION	01/31/18	DMS
9	REVISED LANDSCAPE PLAN PER VILLAGE	04/05/18	JTM

LOC. # 311466

W 151ST
& S 80TH

15100 S 80TH AVE
ORLAND PARK, IL 60462

DRAWN BY:	PP
CHECKED BY:	TAZ
DATE:	07/23/15
PROJECT #:	33-1466

SHEET TITLE
EQUIPMENT SKID PLAN & NOTES

SHEET NUMBER
B-1

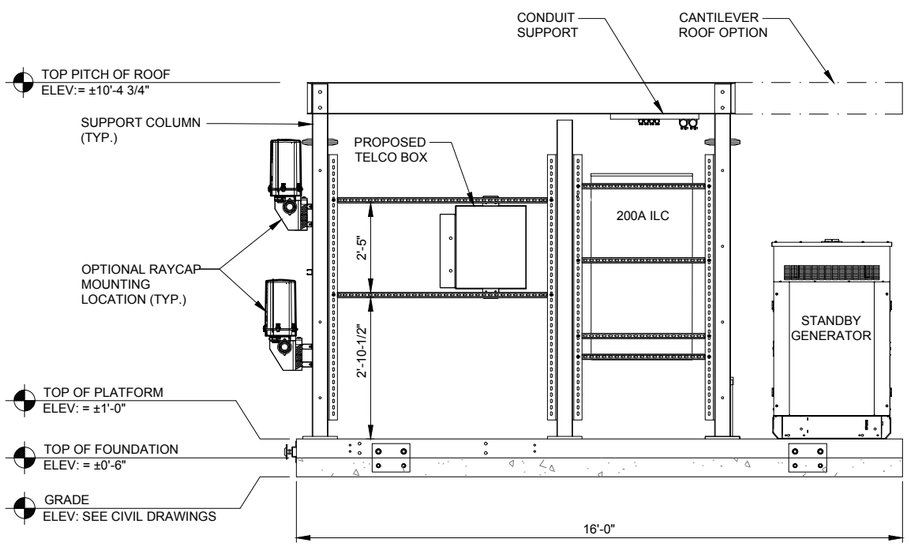

1 EQUIPMENT PLATFORM ELEVATION
SCALE: N.T.S.

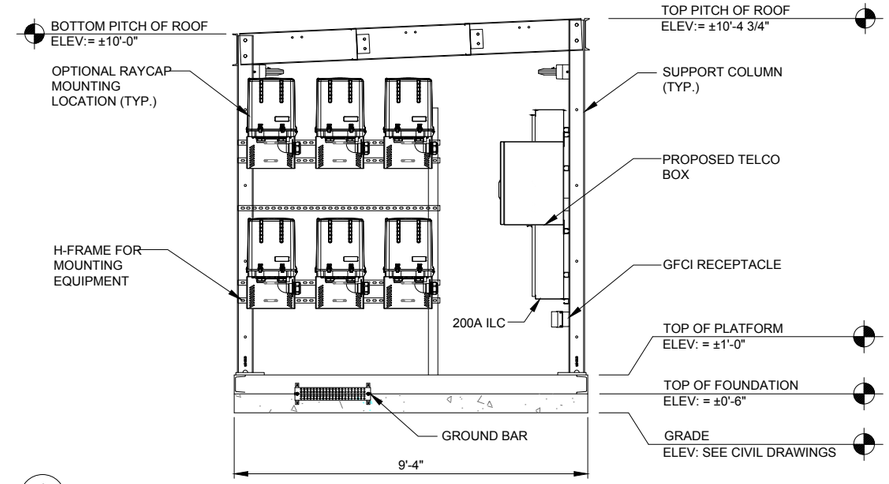

2 EQUIPMENT PLATFORM ELEVATION
SCALE: N.T.S.

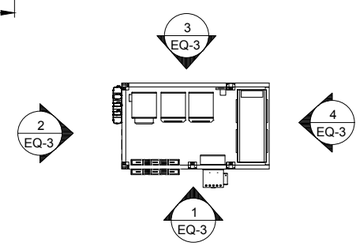

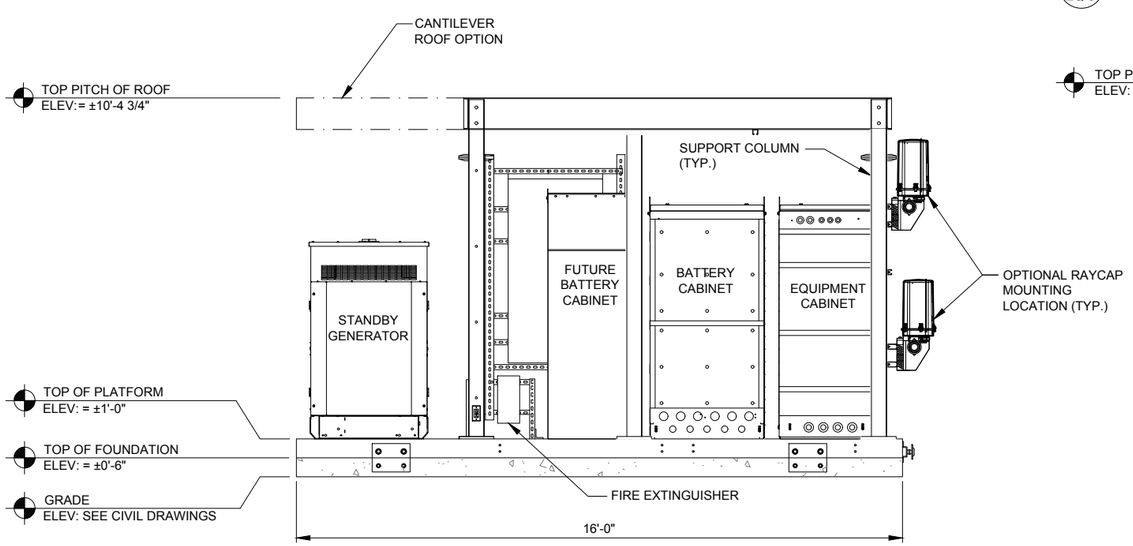

3 EQUIPMENT PLATFORM ELEVATION
SCALE: N.T.S.

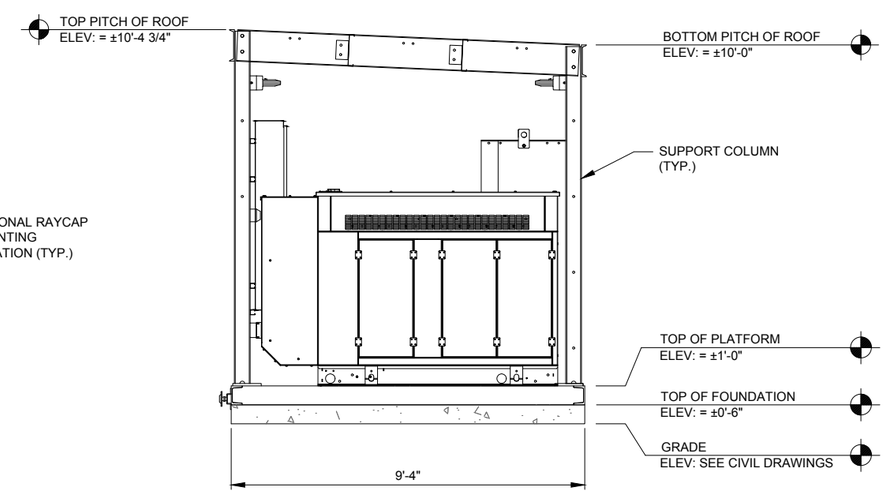

4 EQUIPMENT PLATFORM ELEVATION
SCALE: N.T.S.

NOTE: FOR REFERENCE ONLY

CHICAGO SMSA
limited partnership
d/b/a VERIZON WIRELESS

TERRA CONSULTING GROUP, LTD.
600 BUSSE HIGHWAY
PARK RIDGE, IL 60068
PH: 847-698-6400
FAX: 847-698-6401

REVISIONS

NO	DESCRIPTION	DATE	BY
3	FINAL PENDING FIBER	08/21/17	DMS
4	UPDATE WITH NEW ECR	08/31/17	JTM
5	UPDATE WITH NEW LAYOUT	09/06/17	DMS
6	FINALS WITH FINER	10/20/17	RA
7	ADDITION OF LANDSCAPING PLAN	12/29/17	JTM
8	UPDATE PER GAS COORDINATION	01/31/18	DMS
9	REVISED LANDSCAPE PLAN PER VILLAGE	04/05/18	JTM

LOC. # 311466

W 151ST
& S 80TH

15100 S 80TH AVE
ORLAND PARK, IL 60462

DRAWN BY:	PP
CHECKED BY:	TAZ
DATE:	07/23/15
PROJECT #:	33-1466

SHEET TITLE
EQUIPMENT PLATFORM ELEVATIONS

SHEET NUMBER
B-2

UTILITY NOTES:

WORK INCLUDES:

THESE NOTES AND ACCOMPANYING DRAWINGS COMPLEMENT THE PROVISIONS AND INSTALLATIONS BY THE ELECTRICAL CONTRACTOR, OF ALL LABOR, MATERIALS AND EQUIPMENT REQUIRED TO INSTALL THE ELECTRICAL WORK COMPLETE IN CONNECTION WITH THIS VERIZON WIRELESS SITE AND SHALL INCLUDE, BUT NOT BE LIMITED TO THE FOLLOWING:

1. THE PROVISIONS, INSTALLATION, AND CONNECTION OF A GROUNDING ELECTRODE SYSTEM COMPLETE WITH A BUILDING AND SECONDARY GROUNDING, CELLULAR TELEPHONE COMMUNICATIONS TOWER AND CONNECTIONS TO THE INCOMING ELECTRICAL DISTRIBUTION EQUIPMENT.
2. THE PROVISION AND INSTALLATION OF AN OVERHEAD ELECTRICAL SERVICE OR UNDERGROUND ELECTRICAL SERVICE AND ALL ASSOCIATED WIRE AND CONDUIT AS REQUIRED AND/OR INDICATED ON PLANS.
3. THE PROVISION, INSTALLATION OF CONDUIT AND CONNECTIONS FOR LOCAL TELEPHONE SERVICE.
4. THE FURNISHING AND INSTALLATION OF THE ELECTRICAL SERVICE ENTRANCE CONDUCTORS, CONDUITS, METER SOCKET, AND CONNECTIONS TO THE SERVICE EQUIPMENT WITHIN THE ENCLOSURE.
5. TWO INCH (2") AND THREE INCH (3") DIAMETER PVC CONDUITS SCHEDULE 40.
6. ALL PVC CONDUITS SHOULD BE LEFT WITH NYLON PULL CORD FOR FUTURE USE.
7. EXCAVATION, TRENCHING, AND BACKFILLING FOR CONDUIT(S), CABLE(S), AND EXTERNAL GROUNDING SYSTEM.

CODES, PERMITS, AND FEES:

1. ALL REQUIRED PERMITS, LICENSES, INSPECTIONS AND APPROVALS SHALL BE SECURED AND ALL FEES FOR SAME PAID BY CONTRACTOR.
2. THE INSTALLATION SHALL COMPLY WITH ALL APPLICABLE CODES: STATE, LOCAL AND NATIONAL, AND THE DESIGN, PERFORMANCE CHARACTERISTICS AND METHODS OF CONSTRUCTION OF ALL ITEMS AND EQUIPMENT SHALL BE IN ACCORDANCE WITH THE LATEST ISSUE OF THE VARIOUS APPLICABLE STANDARD SPECIFICATIONS OF THE FOLLOWING AUTHORITIES:

N.E.C.	NATIONAL ELECTRIC CODE
A.N.S.I.	AMERICAN NATIONAL STANDARDS INSTITUTE
I.E.E.E.	INSTITUTE OF ELECTRICAL AND ELECTRONICS ENGINEERS
A.S.T.M.	AMERICAN SOCIETY FOR TESTING MATERIALS
N.E.M.A.	NATIONAL ELECTRICAL MANUFACTURERS ASSOCIATION
U.L.	UNDERWRITERS LABORATORIES, INC.
N.F.P.A.	NATIONAL FIRE PROTECTION ASSOCIATION

RACEWAYS AND WIRING:

1. WIRING OF EVERY KIND MUST BE INSTALLED IN CONDUIT, UNLESS NOTED OTHERWISE, OR AS APPROVED BY THE ENGINEER.
2. UNLESS OTHERWISE SPECIFIED, ALL WIRING SHALL BE COPPER (CU) TYPE THWN, SIZED IN ACCORDANCE WITH THE NATIONAL ELECTRICAL CODE.
3. RACEWAYS SHALL BE GALVANIZED STEEL, SIZED IN ACCORDANCE WITH THE NATIONAL ELECTRICAL CODE, UNLESS OTHERWISE NOTED. ALL RACEWAYS SHALL BE APPROVED FOR THE INSTALLATION.
4. PULL OR JUNCTION BOXES SHALL BE PROVIDED AS REQUIRED TO FACILITATE INSTALLATION OF RACEWAYS AND WIRING. PROVIDE JUNCTION AND PULLBOXES FOR CONDUIT RUNS WITH MORE THAN (360) DEGREES OF BENDS.
5. PROVIDE A COMPLETE RACEWAY AND WIRING INSTALLATION, PERMANENTLY AND EFFECTIVELY GROUNDED IN ACCORDANCE WITH ARTICLE 250 OF THE NATIONAL ELECTRICAL CODE AND LOCAL CODES.
6. ELECTRICAL PANELBOARD SHALL BE FURNISHED AND INSTALLED BY OTHERS. ELECTRICAL CONTRACTOR SHALL FIELD VERIFY EXACT LOCATION.
7. ALL STEEL CONDUIT SHALL BE BONDED AT BOTH ENDS WITH GROUNDING BUSHING.

GENERAL NOTES:

SEE DETAILS AND SCHEDULES ON DRAWINGS AND SPECIFICATIONS FOR MEANING OF ABBREVIATIONS AND ADDITIONAL REQUIREMENTS AND INFORMATION. CHECK ARCHITECTURAL, STRUCTURAL AND OTHER MECHANICAL AND ELECTRICAL DRAWINGS FOR SCALE, SPACE LIMITATIONS, COORDINATION, AND ADDITIONAL INFORMATION, ETC. REPORT ANY DISCREPANCIES, CONFLICTS, ETC. TO ENGINEER BEFORE SUBMITTING BID. ALL EQUIPMENT FURNISHED BY OTHERS (FBO) SHALL BE PROVIDED WITH PROPER MOTOR STARTERS, DISCONNECTS, CONTROLS, ETC. BY THE ELECTRICAL CONTRACTOR UNLESS SPECIFICALLY NOTED OTHERWISE. THE ELECTRICAL CONTRACTOR SHALL INSTALL AND COMPLETELY WIRE ALL ASSOCIATED EQUIPMENT IN ACCORDANCE WITH MANUFACTURER'S WIRE DIAGRAMS AND AS REQUIRED FOR A COMPLETE OPERATING INSTALLATION. ELECTRICAL CONTRACTOR SHALL VERIFY AND COORDINATE ELECTRICAL CHARACTERISTICS AND REQUIREMENTS OF (FBO) EQUIPMENT PRIOR TO ROUGH-IN OF CONDUIT AND WIRING TO AVOID CONFLICTS.

COORDINATION WITH UTILITY COMPANY:

THE ELECTRICAL CONTRACTOR SHALL COORDINATE COMPLETE ELECTRICAL SERVICE WITH LOCAL UTILITY COMPANY FOR A COMPLETE OPERATIONS SYSTEM, INCLUDING TRANSFORMER CONNECTIONS, CONCRETE TRANSFORMER PADS, IF REQUIRED, METER SOCKETS, PRIMARY CABLE RACEWAY REQUIREMENTS, SECONDARY SERVICE, ETC. PRIOR TO SUBMITTING BID TO INCLUDE ALL LABOR AND MATERIALS. THE ELECTRICAL CONTRACTOR SHALL INCLUDE IN THE BID ANY OPTIONAL OR EXCESS FACILITY CHARGES ASSOCIATED WITH PROVIDING ELECTRICAL SERVICE FROM LOCAL UTILITY COMPANY. VERIFY BEFORE BIDDING TO INCLUDE ALL COSTS. THE ELECTRICAL CONTRACTOR SHALL VERIFY THE AVAILABLE FAULT CURRENT WITH THE LOCAL UTILITY COMPANY PRIOR TO SUBMITTING BID. ADJUST A.I.C. RATINGS OF ALL OVER CURRENT PROTECTION DEVICES IN DISTRIBUTION EQUIPMENT AS REQUIRED TO COORDINATE WITH AVAILABLE FAULT CURRENT FROM LOCAL UTILITY COMPANY. ALL GROUNDING RODS PROVIDED BY THE POWER OR TELEPHONE UTILITY COMPANIES MUST BE TIED INTO THE MAIN EXTERNAL GROUND RING.

UTILITY CONTACTS:

POWER: COMED
LEONARD ANDERSON
(708) 235-2346

FIBER: ONE FIBER
WADE BOWERS
(512)618-3411

ELECTRICAL CONTRACTOR SHALL COORDINATE WITH POWER COMPANY FOR ENTRY INTO FENCED AREA BY EITHER MAILING A KEY TO A SLAVE LOCKED CHAIN AT THE FENCE GATE OR CALLING AND LEAVING A COMBINATION.

FOR CONTINUATION AND CONNECTION OF ELECTRIC AND FIBER SERVICE. COORDINATE WITH ELECTRIC AND FIBER COMPANY.

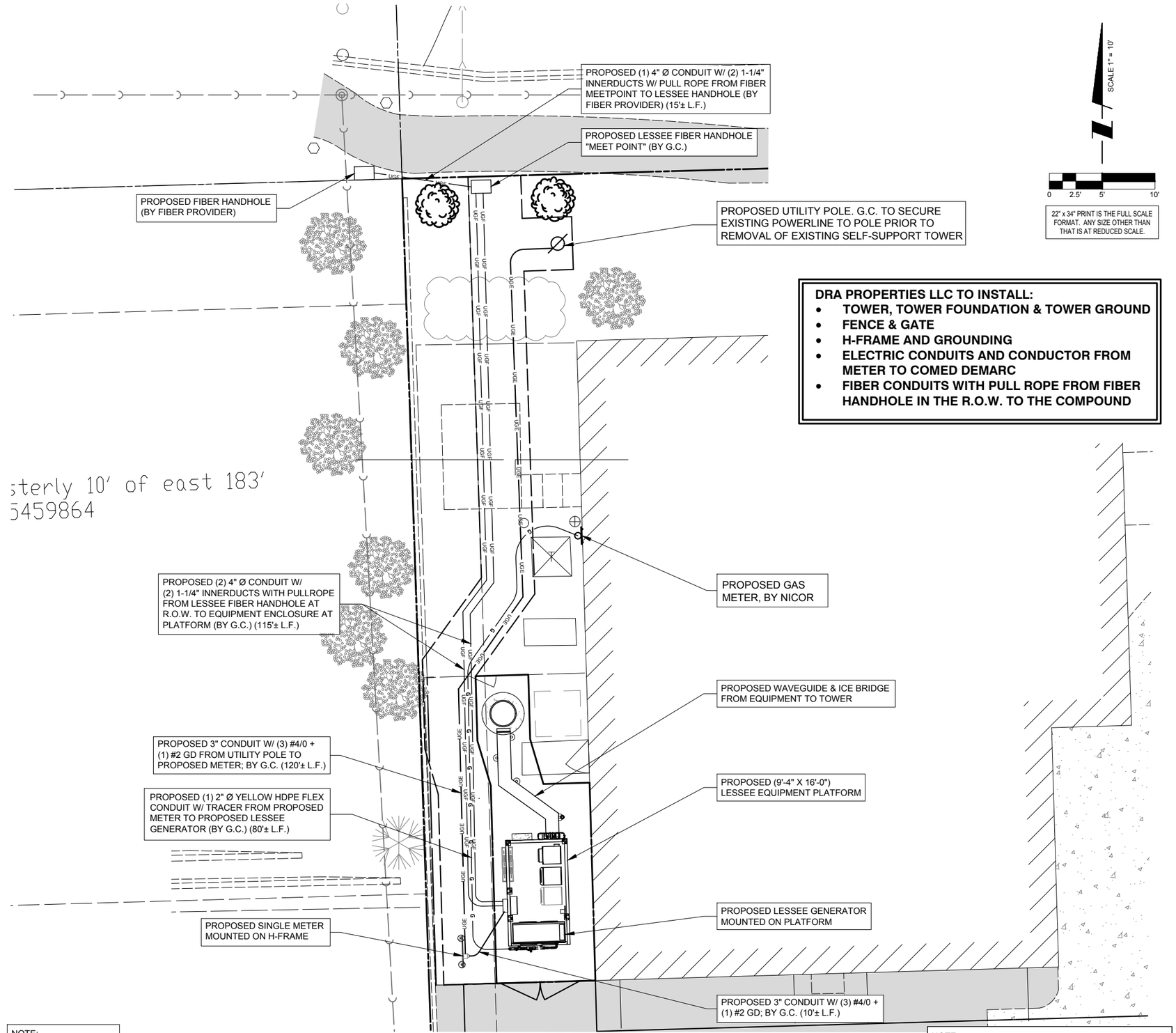

DRA PROPERTIES LLC TO INSTALL:

- **TOWER, TOWER FOUNDATION & TOWER GROUND**
- **FENCE & GATE**
- **H-FRAME AND GROUNDING**
- **ELECTRIC CONDUITS AND CONDUCTOR FROM METER TO COMED DEMARC**
- **FIBER CONDUITS WITH PULL ROPE FROM FIBER HANDHOLE IN THE R.O.W. TO THE COMPOUND**

NOTE:
SEE SHEET LP FOR ENTIRE UTILITY ROUTE.

1 SITE UTILITY ROUTING PLAN

NOTE:
CONTRACTOR TO VERIFY ROUTES WITH LOCAL UTILITY COMPANY PRIOR TO INSTALLATION.

CHICAGO SMSA
limited partnership
d/b/a VERIZON WIRELESS

TERRA CONSULTING GROUP, LTD.
600 BUSSE HIGHWAY
PARK RIDGE, IL 60068
PH: 847-698-6400
FAX: 847-698-6401

REVISIONS

NO.	DESCRIPTION	DATE	BY
3	FINAL PENDING FIBER	08/21/17	DMS
4	UPDATE WITH NEW ECR	08/31/17	JTM
5	UPDATE WITH NEW LAYOUT	09/06/17	DMS
6	FINALS WITH FINER	10/20/17	RA
7	ADDITION OF LANDSCAPING PLAN	12/29/17	JTM
8	UPDATE PER GAS COORDINATION	01/31/18	DMS
9	REVISED LANDSCAPE PLAN PER VILLAGE	04/05/18	JTM

LOC. # 311466

W 151ST
& S 80TH

15100 S 80TH AVE
ORLAND PARK, IL 60462

DRAWN BY:	PP
CHECKED BY:	TAZ
DATE:	07/23/15
PROJECT #:	33-1466

SHEET TITLE

UTILITY ROUTING PLAN

SHEET NUMBER

E-1

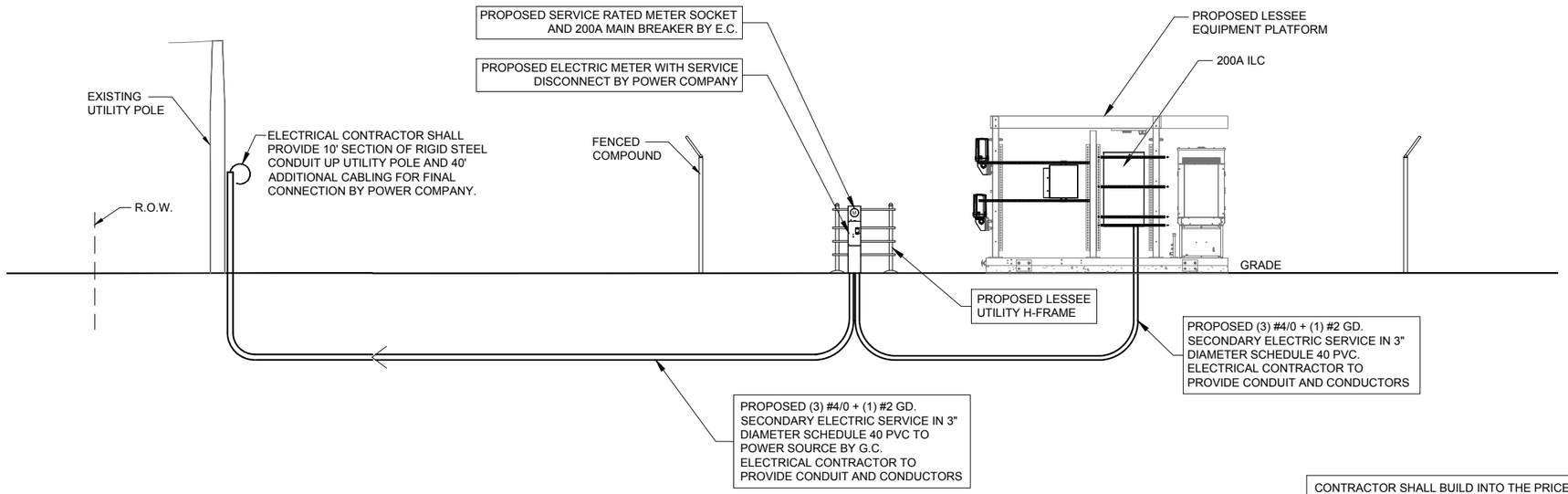

ELECTRICAL SERVICE: 200 AMP 120/240V SINGLE PHASE 3 WIRE

1 POWER RISER DIAGRAM
SCALE: N.T.S.

CONTRACTOR SHALL BUILD INTO THE PRICE OF THE BID THE COST OF TWO (2) MOBILIZATIONS:

1) POWER/FIBER PERMIT PULLED PRIOR TO BUILDING PERMIT AND PRELIMINARY WORK (SMART JACK ON A STICK, ETC) COMPLETED PRIOR TO GENERAL CONSTRUCTION

2) RETURN TO COMPLETE GENERAL ELECTRICAL CONSTRUCTION

- DESIGN PENDING FIBER COORDINATION

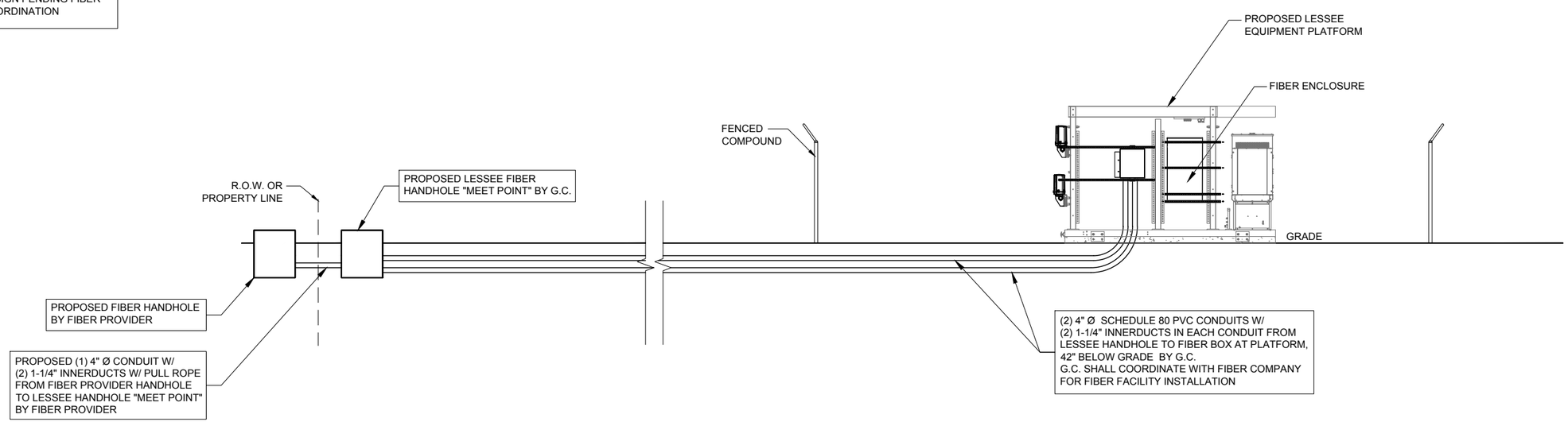

NOTE: VERIFY FIBER ROUTING REQUIREMENTS WITH FIBER COMPANY

2 FIBER RISER DIAGRAM
SCALE: N.T.S.

CHICAGO SMSA
limited partnership
d/b/a VERIZON WIRELESS

TERRA CONSULTING GROUP, LTD.
600 BUSSE HIGHWAY
PARK RIDGE, IL 60068
PH: 847-698-6400
FAX: 847-698-6401

REVISIONS

NO.	DESCRIPTION	DATE	BY
3	FINAL PENDING FIBER	08/21/17	DMS
4	UPDATE WITH NEW ECR	08/31/17	JTM
5	UPDATE WITH NEW LAYOUT	09/06/17	DMS
6	FINALS WITH FINER	10/20/17	RA
7	ADDITION OF LANDSCAPING PLAN	12/29/17	JTM
8	UPDATE PER GAS COORDINATION	01/31/18	DMS
9	REVISED LANDSCAPE PLAN PER VILLAGE	04/05/18	JTM

LOC. # 311466

W 151ST
& S 80TH

15100 S 80TH AVE
ORLAND PARK, IL 60462

DRAWN BY:	PP
CHECKED BY:	TAZ
DATE:	07/23/15
PROJECT #:	33-1466

SHEET TITLE
UTILITY RISER DIAGRAMS

SHEET NUMBER
E-1A

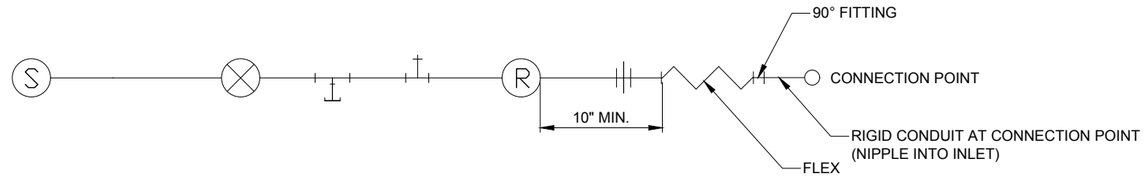

TYPICAL NATURAL GAS PIPING ARRANGEMENT

1 PIPING SCHEMATIC
N.T.S.

LEGEND:

- (S) GAS SUPPLY PER VERIZON SPEC.
- ⊗ 1-1/4" FULL PORT MANUAL SHUT OFF VALVE
- DIRT LEG (1-1/4" TEE w/ 6" DROP NIPPLE + 1-1/4" CAP
- 1-1/4" x 1-1/4"x 1/2" TEE ACCESS FOR PRESSURE GAUGE w/ 1/2" PETE'S PLUG ADAPTER
- (R) SENSUS GAS REGULATOR (SEE CHART)
- UNION
- FLEX CONNECTOR

PIPE SIZING & REGULATOR MODEL CHART

GENERATOR MODEL	PIPE SIZE	REGULATOR MODEL
SG035 (35KW)	1-1/4"	SENSUS MODEL 143-80-2 W/ GREEN SPRING & 1/2" ORIFICE AT 10 DEGREES
SG050 (50KW)	1-1/4"	SENSUS MODEL 143-80-2 W/ GREEN SPRING & 1/2" ORIFICE AT 10 DEGREES
SG100 (100KW)*	1-1/4"	SENSUS MODEL 243-12-2 W/ GREEN SPRING & 3/4" ORIFICE AT 10 DEGREES
	1-1/2"	SENSUS MODEL 243-12-2 W/ GREEN SPRING & 1/2" ORIFICE AT 10 DEGREES

*FOR 400A SITES

NOTES:
1. ALL PIPING SHALL BE 1-1/4" BLACK PIPE SCHEDULE 40 (UNLESS OTHERWISE SPECIFIED).

2. ALL FITTING SHALL BE 1-1/4" BLACK MALLEABLE IRON (UNLESS OTHERWISE SPECIFIED).

NOTE:
THE GENERAL CONTRACTOR IS TO VERIFY REGULATOR SIZE BASED ON THE SIZE OF THE GENERATOR. THIS IS BASED ON HAVING A 2 PSI GAS (INLET) PRESSURE SUPPLY FROM THE GAS METER TO THE SENSUS REGULATOR & GENERATOR OUTLET PRESSURE OF 11"-14" W.C.

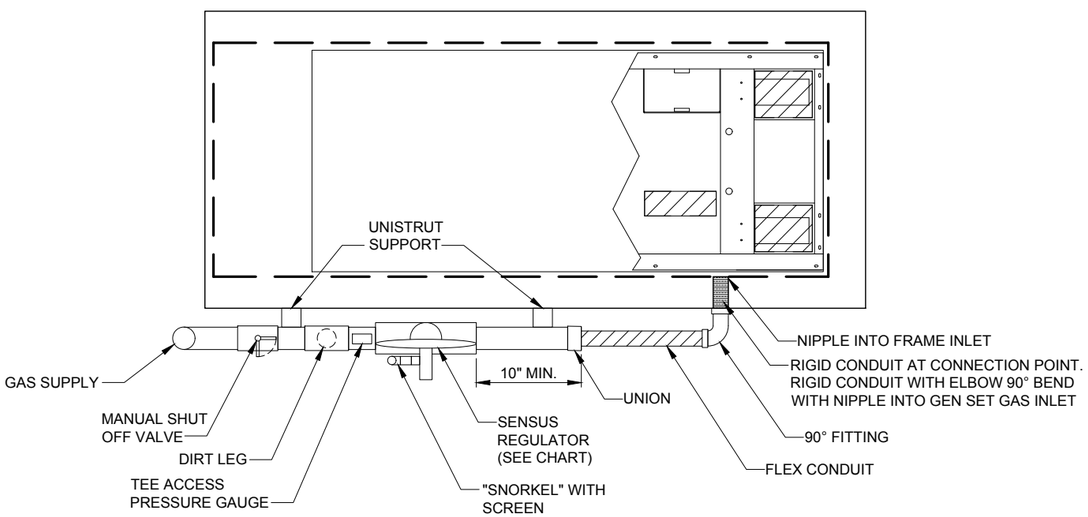

2 GAS PIPING PLAN AT GENERATOR
N.T.S.

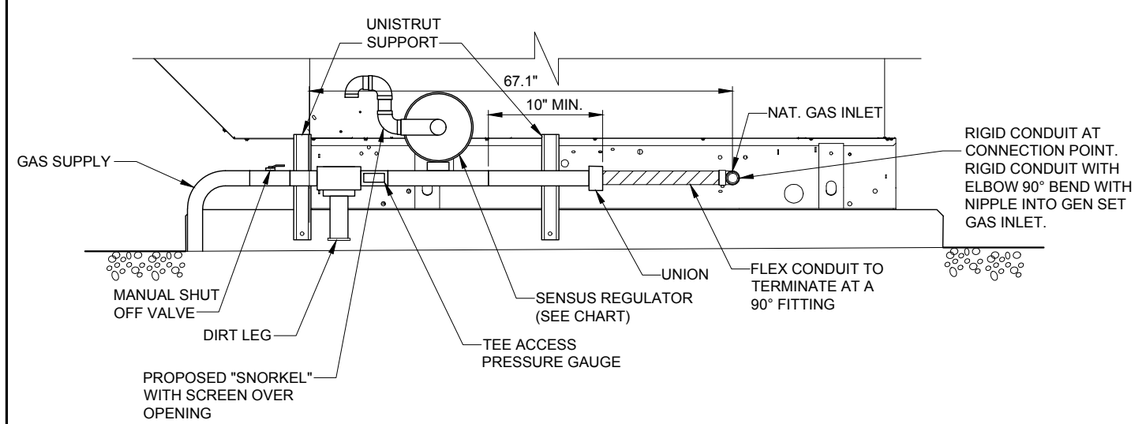

3 GAS PIPING PROFILE AT GENERATOR
N.T.S.

CHICAGO SMSA
limited partnership
d/b/a VERIZON WIRELESS

TERRA CONSULTING GROUP, LTD.
600 BUSSE HIGHWAY
PARK RIDGE, IL 60068
PH: 847-698-6400
FAX: 847-698-6401

REVISIONS

NO.	DESCRIPTION	DATE	BY
3	FINAL PENDING FIBER	08/21/17	DMS
4	UPDATE WITH NEW ECR	08/31/17	JTM
5	UPDATE WITH NEW LAYOUT	09/06/17	DMS
6	FINALS WITH FINER	10/20/17	RA
7	ADDITION OF LANDSCAPING PLAN	12/29/17	JTM
8	UPDATE PER GAS COORDINATION	01/31/18	DMS
9	REVISED LANDSCAPE PLAN PER VILLAGE	04/05/18	JTM

LOC. # 311466

W 151ST
& S 80TH

15100 S 80TH AVE
ORLAND PARK, IL 60462

DRAWN BY:	PP
CHECKED BY:	TAZ
DATE:	07/23/15
PROJECT #:	33-1466

SHEET TITLE
GAS PIPING DETAILS

SHEET NUMBER
E-1B

GROUNDING ELECTRODE SYSTEM NOTES:

1. ALL GROUNDING CONNECTIONS SHALL BE MADE BY THE EXOTHERMIC PROCESS CONNECTIONS SHALL INCLUDE ALL CABLE TO CABLE, SPLICES, ETC. ALL CABLE TO GROUND RODS, GROUND RODS SPLICES AND LIGHTNING PROTECTION SYSTEM AS INDICATED. GROUND FOUNDATION ONLY AS INDICATED BY PM. ALL MATERIALS USED (MOLDS, WELDING, METAL, TOOLS, ETC.) SHALL BE BY EXOTHERMIC PROCESS AND INSTALLED PER MANUFACTURERS RECOMMENDATIONS AND PROCEDURES. GROUND CONDUCTOR SHALL HAVE A MINIMUM 24" BENDING RADIUS.
2. ALL EXOTHERMIC CONNECTIONS ON GALVANIZED SURFACES SHALL BE CLEANED THOROUGHLY AND COLORED TO MATCH SURFACE WITH (2) TWO COATS OF SHERWIN-WILLIAMS GALVITE (WHITE) PAINT B50W3 (OR EQUAL) OR SHERWIN- WILLIAMS SILVERBRITE (ALUMINUM) B59S11 (OR EQUAL).
3. ALL ELECTRICAL & MECHANICAL GROUND CONNECTIONS SHALL HAVE ANTI-OXIDANT COMPOUND APPLIED TO CONNECTION
4. FENCE/GATE: GROUND FENCE POSTS WITHIN 6 FEET OF PLATFORM AND 25 FEET OF TOWER AS INDICATED ON DRAWINGS. GROUND EACH GATE POST AND CORNER POST. GROUND CONNECTIONS TO FENCE POSTS SHALL BE MADE BY THE EXOTHERMIC PROCESS AND INSTALLED PER MANUFACTURER'S RECOMMENDATIONS AND PROCEDURES. ALL OTHER CONNECTIONS FOR THE GROUND GRID SYSTEM SHALL BE MADE BY THE EXOTHERMIC PROCESS, AND INSTALLED PER MANUFACTURER'S RECOMMENDATIONS AND PROCEDURES.
6. UTILITY COMPANY COORDINATION: ELECTRICAL CONTRACTOR SHALL CONFIRM THAT ALL WORK IS IN ACCORDANCE WITH THE RULES OF THE LOCAL UTILITY COMPANY BEFORE SUBMITTING THE BID, THE CONTRACTOR SHALL CHECK WITH THE UTILITY COMPANIES SUPPLYING SERVICE TO THIS PROJECT AND SHALL DETERMINE FROM THEM ALL EQUIPMENT AND CHARGES WHICH THEY WILL REQUIRE AND SHALL INCLUDE THE COST IN THE BID.
7. GROUND TEST: GROUND TESTS SHALL BE PERFORMED AS REQUIRED BY LESSEE STANDARD PROCEDURES. GROUND GRID RESISTANCE SHALL NOT EXCEED 5 OHMS.
8. CONTRACTOR SHALL SUBMIT THE GROUND RESISTANCE TEST REPORT AS FOLLOWS:
   1. ONE (1) COPY TO OWNER REPRESENTATIVE
   2. ONE (1) COPY TO ENGINEER
   3. ONE (1) COPY TO KEEP INSIDE EQUIPMENT ENCLOSURE

TYPICAL KEYED GROUNDING NOTES

1. #2 AWG TNND SOLID BARE COPPER CONDUCTOR 42" BELOW GRADE (TYPICAL) MINIMUM 24" BENDING RADIUS
2. PLATFORM CORNER POST, STEEL COLUMN, STEEL BEAM & CANOPY GROUND
3. CABINET GROUND BOLTED TO UNIT HOUSING
4. DISCONNECT AND ELECTRIC SERVICE GROUND TO GROUND ROD
5. 5/8" x 10' COPPER CLAD GROUND ROD
6. GROUND CHAIN LINK FENCE (TYPICAL) EXOTHERMIC CONNECTION (TYPE VS) GROUND FENCE POSTS WITHIN 6 FEET OF PLATFORM AND 25 FEET OF TOWER. (SEE DETAIL, SHEET E-5.)
7. MAINTAIN TWO FOOT DISTANCE OFF OF STRUCTURES.
8. GROUND COAXIAL ANTENNA CABLES TO GROUND BAR BY ANTENNA CONTRACTOR TERMINATE CABLES 1'-0" FROM PLATFORM AND INSTALL LIGHTNING SURGE ARRESTORS ON EACH CABLE GROUND.
9. EXOTHERMICALLY WELD COPPER GROUND BAR TAIL TO HALO GROUND RING (EXOTHERMIC CONNECTION TYPE TA) BY ANTENNA CONTRACTOR. FINAL CONNECTION BY ELECTRICAL CONTRACTOR.
10. 4"X20"X1/4" TNND INSULATED COPPER GROUND BAR, NON ISOLATED WITH 10.0' LONG #2 AWG TNND SOLID COPPER WIRE WELDED TAILS (HARGER GBIT 14420VW)
11. GROUND CABLE WAVEGUIDE BRIDGE (TYP.) BY ELECTRICAL CONTRACTOR.
12. PROPOSED PERIPHERAL GROUND RING SHOULD BE INSTALLED 1' TO 2' INSIDE THE FENCE LINE, THE TOWER GROUND RING SHOULD BE INSTALLED A MINIMUM 2' OFF OF ANY STRUCTURES.
13. EXISTING TOWER OR COMPOUND GROUND RING (V.I.F.)
14. GATE JUMPERS (SEE DETAIL, SHEET E-4)
15. BOND EXISTING/ PROPOSED TOWER GROUND RING TO PROPOSED PLATFORM GROUND RING WITH #2 AWG TNND SOLID COPPER CONDUCTOR IN 2 LOCATIONS.
16. TWO #2 LEADS FROM THE EGR TO THE GROUND BAR AT UTILITY FRAME LOCATED ON PLATFORM STEEL. CADWELD AT EGR AND DOUBLE HOLE LUGS ON PLATFORM.
17. BOND RAYCAP TO MGB.
18. EACH TOWER FOUNDATION REBAR MESH/CAGE TO BE BONDED TO TOWER GROUND RING WITH #2 TINNED SOLID COPPER CONDUCTOR
19. EACH TOWER FOUNDATION TO HAVE AT LEAST ONE ANCHOR BOLT BONDED TO TOWER GROUND RING WITH #2 TINNED SOLID COPPER CONDUCTOR
20. COPPER CLAD GROUND ROD WITH INSPECTION WELL TOP OF GROUND ROD MAX 24" BURY.
21. EXTEND GROUND CONDUCTORS IN 1/2" RIGID H.W. CONDUIT ADJACENT TO PAD, OFFSET AND ATTACH TO EXTERIOR OF GENERATOR HOUSING AND EXTEND TO GROUND LUGS AS REQUIRED, VERIFY LOCATION WITH GENERAC.
22. MGB MOUNTED UNDER PERIMETER BEAM

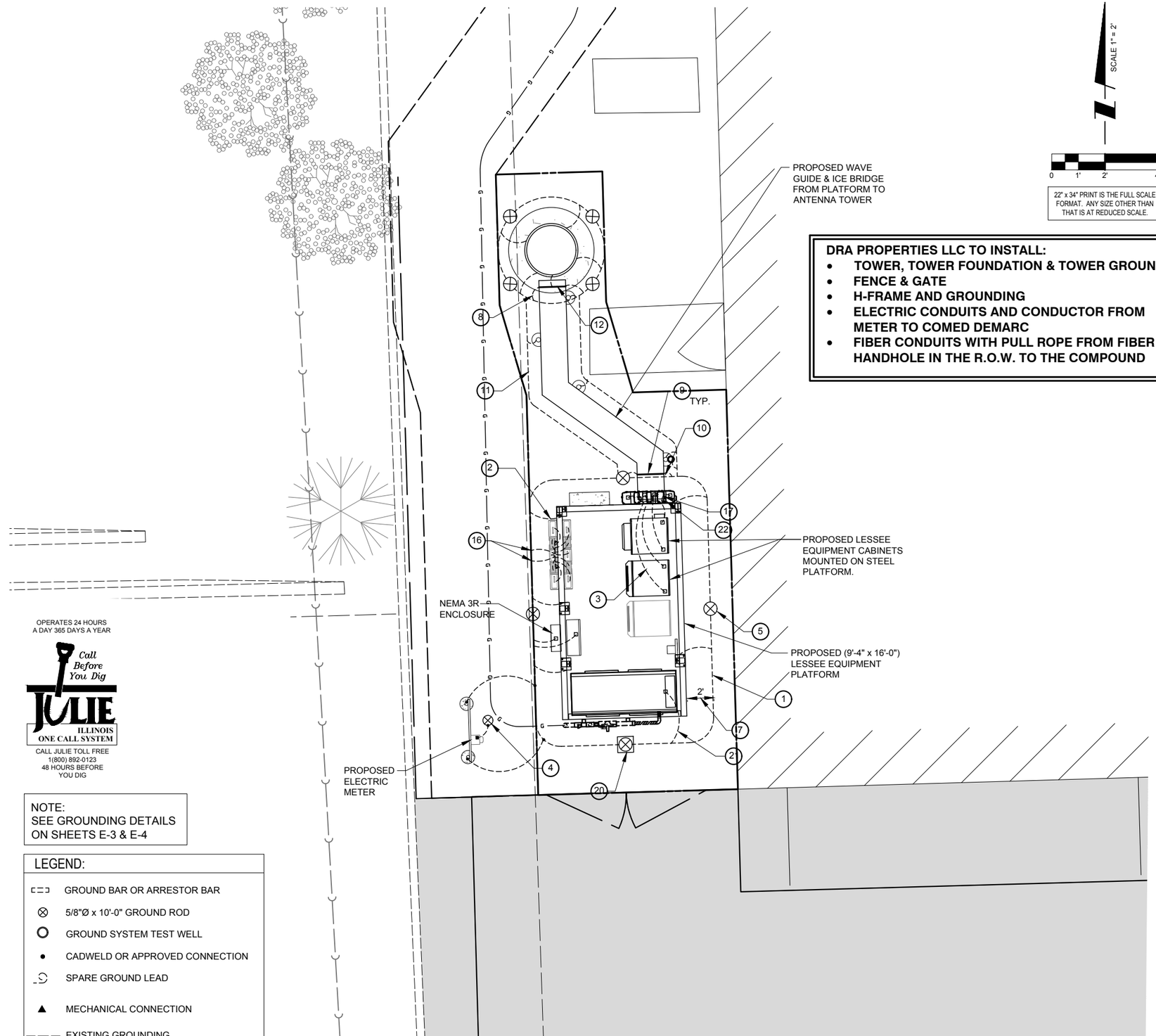

OPERATES 24 HOURS A DAY 365 DAYS A YEAR

Call Before You Dig
JULIE ILLINOIS ONE CALL SYSTEM
CALL JULIE TOLL FREE 1(800) 892-0123 48 HOURS BEFORE YOU DIG

NOTE:
SEE GROUNDING DETAILS ON SHEETS E-3 & E-4

LEGEND:

- GROUND BAR OR ARRESTOR BAR
- 5/8"Ø x 10'-0" GROUND ROD
- GROUND SYSTEM TEST WELL
- CADWELD OR APPROVED CONNECTION
- SPARE GROUND LEAD
- MECHANICAL CONNECTION
- EXISTING GROUNDING
- NEW GROUNDING

1 SITE GROUNDING PLAN
SCALE: 1" = 2'

SCALE 1" = 2'
0 1' 2' 4'
22" x 34" PRINT IS THE FULL SCALE FORMAT. ANY SIZE OTHER THAN THAT IS AT REDUCED SCALE.

DRA PROPERTIES LLC TO INSTALL:

- **TOWER, TOWER FOUNDATION & TOWER GROUND**
- **FENCE & GATE**
- **H-FRAME AND GROUNDING**
- **ELECTRIC CONDUITS AND CONDUCTOR FROM METER TO COMED DEMARC**
- **FIBER CONDUITS WITH PULL ROPE FROM FIBER HANDHOLE IN THE R.O.W. TO THE COMPOUND**

CHICAGO SMSA
limited partnership
d/b/a VERIZON WIRELESS

TERRA CONSULTING GROUP, LTD.
600 BUSSE HIGHWAY
PARK RIDGE, IL 60068
PH: 847-698-6400
FAX: 847-698-6401

REVISIONS

NO.	DESCRIPTION	DATE	BY
3	FINAL PENDING FIBER	08/21/17	DMS
4	UPDATE WITH NEW ECR	08/31/17	JTM
5	UPDATE WITH NEW LAYOUT	09/06/17	DMS
6	FINALS WITH FINER	10/20/17	RA
7	ADDITION OF LANDSCAPING PLAN	12/29/17	JTM
8	UPDATE PER GAS COORDINATION	01/31/18	DMS
9	REVISED LANDSCAPE PLAN PER VILLAGE	04/05/18	JTM

LOC. # 311466

W 151ST
& S 80TH

15100 S 80TH AVE
ORLAND PARK, IL 60462

DRAWN BY:	PP
CHECKED BY:	TAZ
DATE:	07/23/15
PROJECT #:	33-1466

SHEET TITLE
SITE GROUNDING PLAN

SHEET NUMBER
E-2

NOTE:
ANTENNA CABLES SHALL BE GROUNDED AT THE ANTENNA HEIGHT OF TOWER

NOTE:
ALL CABINET GROUND CONNECTION BY OTHERS.

APPROVED UL LISTED GROUND CLAMPS	
APPLICATION	UL LISTED HARGER PART #
METAL FLANGE	213, 213T, 213TTP
PIPE MEMBER	CPC SERIES (SIZED TO FIT DIAMETER OF PIPE)
LARGER PIPE MEMBER	UPC SERIES (UNIVERSAL PIPE CLAMP) SIZED TO FIT DIAMETER OF PIPE

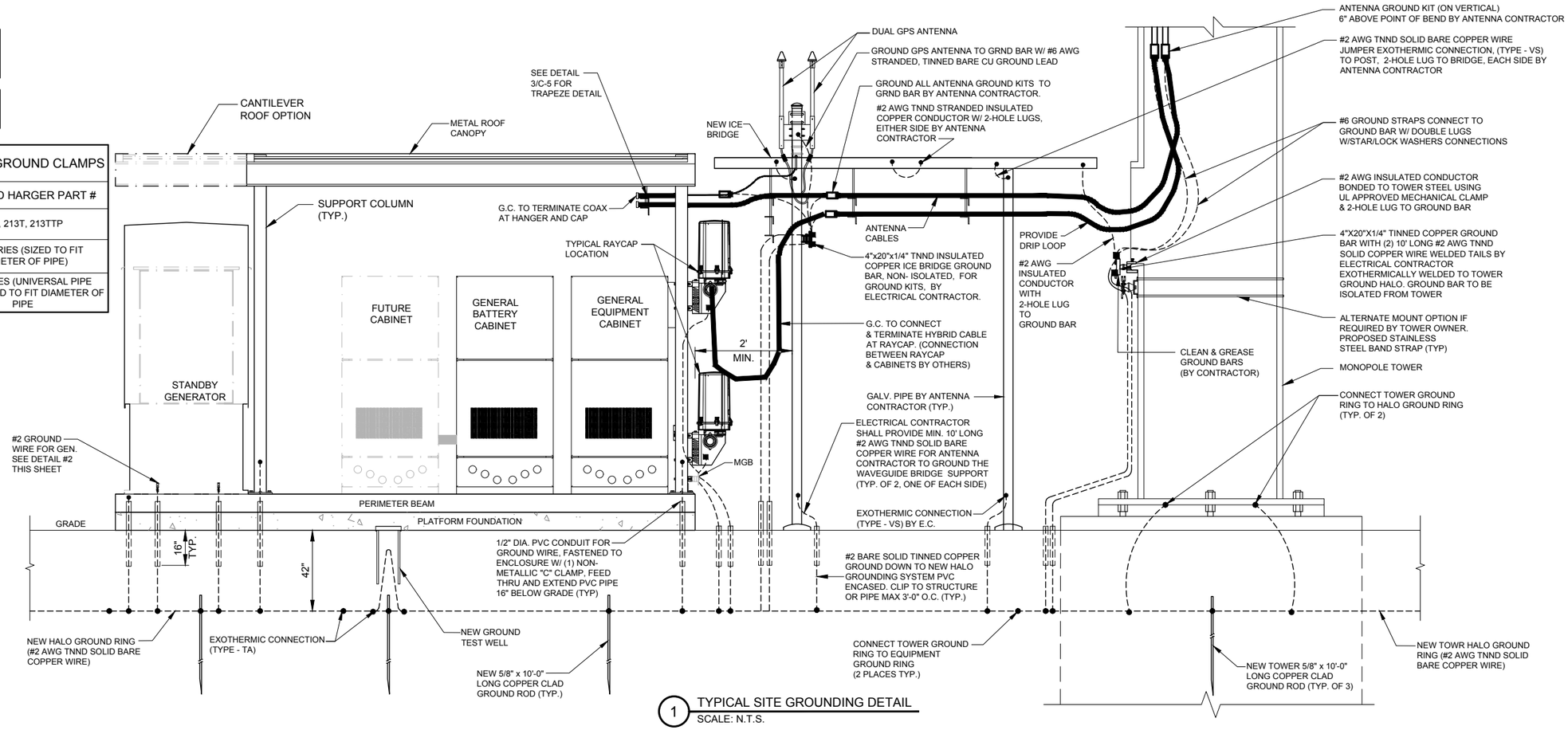

1 TYPICAL SITE GROUNDING DETAIL
SCALE: N.T.S.

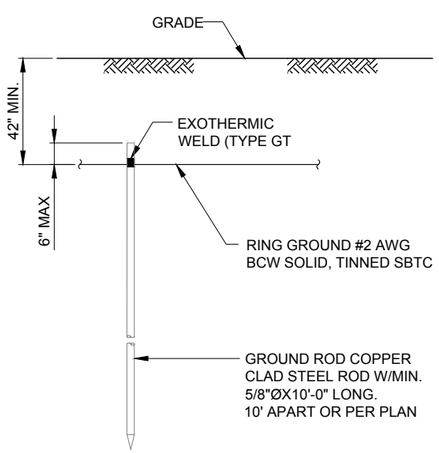

NOTE:
GROUND ROD SHALL BE DRIVEN VERTICALLY, NOT TO EXCEED 45 DEGREES FROM THE VERTICAL.

2 GROUND ROD DETAIL
SCALE: N.T.S.

NOTE:
SET TEST WELL COVER 1" BELOW TOP OF GRAVEL LEASE AREA

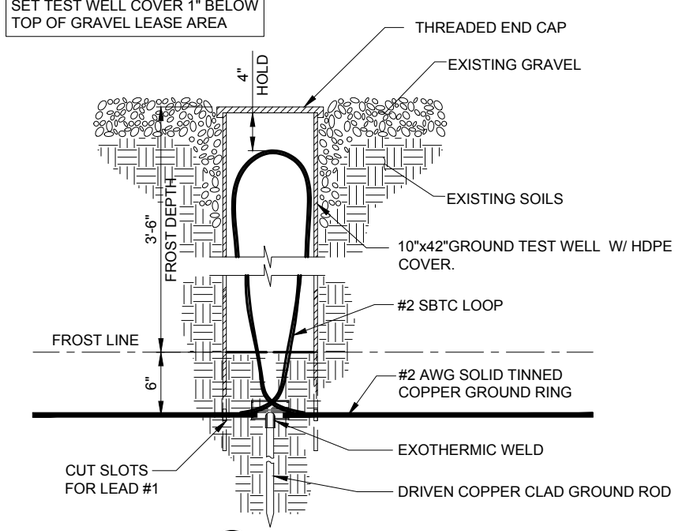

3 TEST WELL DETAIL
SCALE: N.T.S.

CHICAGO SMSA
limited partnership
d/b/a VERIZON WIRELESS

TERRA CONSULTING GROUP, LTD.
600 BUSSE HIGHWAY
PARK RIDGE, IL 60068
PH: 847-698-6400
FAX: 847-698-6401

REVISIONS

NO.	DESCRIPTION	DATE	BY
3	FINAL PENDING FIBER	08/21/17	DMS
4	UPDATE WITH NEW ECR	08/31/17	JTM
5	UPDATE WITH NEW LAYOUT	09/06/17	DMS
6	FINALS WITH FINER	10/20/17	RA
7	ADDITION OF LANDSCAPING PLAN	12/29/17	JTM
8	UPDATE PER GAS COORDINATION	01/31/18	DMS
9	REVISED LANDSCAPE PLAN PER VILLAGE	04/05/18	JTM

LOC. # 311466

W 151ST
& S 80TH

15100 S 80TH AVE
ORLAND PARK, IL 60462

DRAWN BY:	PP
CHECKED BY:	TAZ
DATE:	07/23/15
PROJECT #:	33-1466

SHEET TITLE
GROUNDING DETAILS

SHEET NUMBER
E-3

GROUNDING ELECTRODE SYSTEM NOTES:

1. ALL GROUNDING CONNECTIONS SHALL BE MADE BY THE EXOTHERMIC PROCESS CONNECTIONS SHALL INCLUDE ALL CABLE TO CABLE, SPLICES, ETC. ALL CABLE TO GROUND RODS, GROUND RODS SPLICES AND LIGHTNING PROTECTION SYSTEM AS INDICATED. GROUND FOUNDATION ONLY AS INDICATED BY PM. ALL MATERIALS USED (MOLDS, WELDING, METAL, TOOLS, ETC.) SHALL BE BY EXOTHERMIC PROCESS AND INSTALLED PER MANUFACTURERS RECOMMENDATIONS AND PROCEDURES. GROUND CONDUCTOR SHALL HAVE A MINIMUM 24" BENDING RADIUS.
2. ALL EXOTHERMIC CONNECTIONS ON GALVANIZED SURFACES SHALL BE CLEANED THOROUGHLY AND COLORED TO MATCH SURFACE WITH (2) TWO COATS OF SHERWIN-WILLIAMS GALVITE (WHITE) PAINT B50W3 (OR EQUAL) OR SHERWIN- WILLIAMS SILVERBRITE (ALUMINUM) B59S11 (OR EQUAL).
3. ALL ELECTRICAL & MECHANICAL GROUND CONNECTIONS SHALL HAVE ANTI-OXIDANT COMPOUND APPLIED TO CONNECTION
4. FENCE/GATE: GROUND FENCE POSTS WITHIN 6 FEET OF ENCLOSURE AND 25 FEET OF TOWER AS INDICATED ON DRAWINGS. GROUND EACH GATE POST AND CORNER POST. GROUND CONNECTIONS TO FENCE POSTS SHALL BE MADE BY THE EXOTHERMIC PROCESS AND INSTALLED PER MANUFACTURER'S RECOMMENDATIONS AND PROCEDURES. ALL OTHER CONNECTIONS FOR THE GROUND GRID SYSTEM SHALL BE MADE BY THE EXOTHERMIC PROCESS, AND INSTALLED PER MANUFACTURER'S RECOMMENDATIONS AND PROCEDURES.
5. AFTER INSTALLATION OF THE CANOPY AT THE DOOR, GC/EC IS TO BOND THE CANOPY TO THE DOOR FRAME WITH A #2 CONDUCTOR. USE DOUBLE-LUG CONNECTION. PREP AND PAINT SURFACE TO MATCH AFTER INSTALLATION.
6. UTILITY COMPANY COORDINATION: ELECTRICAL CONTRACTOR SHALL CONFIRM THAT ALL WORK IS IN ACCORDANCE WITH THE RULES OF THE LOCAL UTILITY COMPANY BEFORE SUBMITTING THE BID, THE CONTRACTOR SHALL CHECK WITH THE UTILITY COMPANIES SUPPLYING SERVICE TO THIS PROJECT AND SHALL DETERMINE FROM THEM ALL EQUIPMENT AND CHARGES WHICH THEY WILL REQUIRE AND SHALL INCLUDE THE COST IN THE BID.
7. GROUND TEST: GROUND TESTS SHALL BE PERFORMED AS REQUIRED BY LESSEE STANDARD PROCEDURES. GROUND GRID RESISTANCE SHALL NOT EXCEED 5 OHMS.
8. CONTRACTOR SHALL SUBMIT THE GROUND RESISTANCE TEST REPORT AS FOLLOWS:
   1. ONE (1) COPY TO OWNER REPRESENTATIVE
   2. ONE (1) COPY TO ENGINEER
   3. ONE (1) COPY TO KEEP INSIDE EQUIPMENT ENCLOSURE

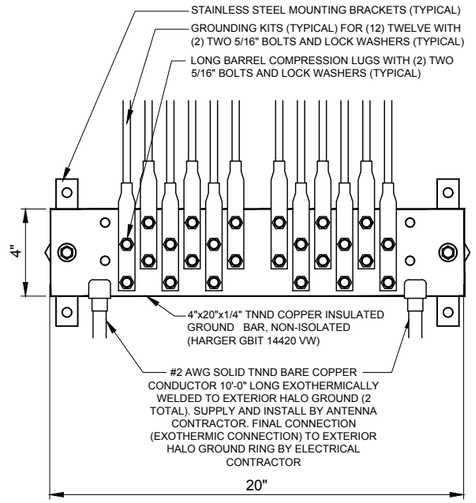

1 EXTERIOR GROUND BAR DETAIL
N.T.S.

NOTES:
1. ALL HARDWARE 18-8 STAINLESS STEEL INCLUDING BELLEVILLES. COAT ALL SURFACES WITH KOPR-SHIELD BEFORE MATING.
2. FOR GROUND BOND TO STEEL ONLY: INSERT A DRAGON TOOTH WASHER BETWEEN LUG AND STEEL, COAT ALL SURFACES WITH KOPR-SHIELD.
3. GROUND BARS, INSTALL BOLT HEAD TOWARD WALL
4. ENCLOSURES, INSTALL BOLT HEAD ON OUTSIDE OF ENCLOSURE

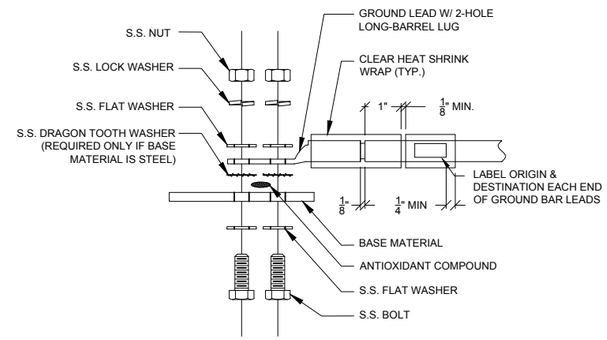

2 GROUND LUG INSTALLATION DETAIL
N.T.S.

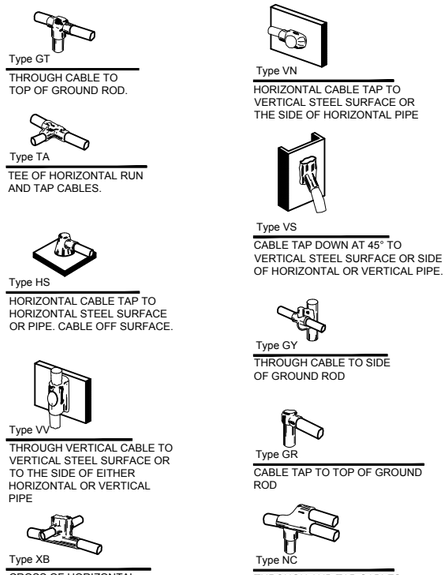

3 EXOTHERMIC WELD DETAILS
EXOTHERMIC AND HARGER ULTRAWELD OR APPROVED EQUAL

CHICAGO SMSA
limited partnership
d/b/a VERIZON WIRELESS

TERRA CONSULTING GROUP, LTD.
600 BUSSE HIGHWAY
PARK RIDGE, IL 60068
PH: 847-698-6400
FAX: 847-698-6401

REVISIONS

NO.	DESCRIPTION	DATE	BY
3	FINAL PENDING FIBER	08/21/17	DMS
4	UPDATE WITH NEW ECR	08/31/17	JTM
5	UPDATE WITH NEW LAYOUT	09/06/17	DMS
6	FINALS WITH FINER	10/20/17	RA
7	ADDITION OF LANDSCAPING PLAN	12/29/17	JTM
8	UPDATE PER GAS COORDINATION	01/31/18	DMS
9	REVISED LANDSCAPE PLAN PER VILLAGE	04/05/18	JTM

LOC. # 311466

W 151ST
& S 80TH

15100 S 80TH AVE
ORLAND PARK, IL 60462

DRAWN BY:	PP
CHECKED BY:	TAZ
DATE:	07/23/15
PROJECT #:	33-1466

SHEET TITLE
GROUNDING DETAILS

SHEET NUMBER
E-4

GENERAL

THE CONSTRUCTION DOCUMENT DRAWINGS ARE INTERRELATED. WHEN PERFORMING THE WORK, EACH CONTRACTOR MUST REFER TO ALL DRAWINGS. COORDINATION IS THE RESPONSIBILITY OF THE GENERAL CONTRACTOR.

DIVISION 1: GENERAL REQUIREMENTS

SECTION 01700 - PROJECT CLOSEOUT

PART 1 - GENERAL

A. OBTAIN AND SUBMIT RELEASES ENABLING THE OWNER UNRESTRICTED USE OF THE WORK AND ACCESS TO SERVICES AND UTILITIES; INCLUDE OCCUPANCY PERMITS, OPERATING CERTIFICATES AND SIMILAR RELEASES.

B. SUBMIT RECORD DRAWINGS, DAMAGE OR SETTLEMENT SURVEY, PROPERTY SURVEY, AND SIMILAR FINAL RECORD INFORMATION.

C. COMPLETE FINAL CLEAN UP REQUIREMENTS. TOUCH UP AND OTHERWISE REPAIR AND RESTORE MARRED EXPOSED FINISHES.

PART 2 - FINAL CLEANING

1. COMPLETE THE FOLLOWING CLEANING OPERATIONS BEFORE REQUESTING INSPECTION FOR CERTIFICATION OF COMPLETION.
   a. CLEAN THE PROJECT SITE, YARD AND GROUNDS, IN AREAS DISTURBED BY CONSTRUCTION ACTIVITIES, INCLUDING LANDSCAPE DEVELOPMENT AREAS, OF RUBBISH, WASTE MATERIALS, LITTER AND FOREIGN SUBSTANCES. SWEEP PAVED AREAS BROOM CLEAN. REMOVE PETRO-CHEMICAL SPILLS, STAINS AND OTHER FOREIGN DEPOSITS, RAKE GROUNDS THAT ARE NEITHER PLANTED NOR PAVED, TO A SMOOTH EVEN-TEXTURED SURFACE.
   b. REMOVE TOOLS, CONSTRUCTION EQUIPMENT, MACHINERY AND SURPLUS MATERIAL FROM THE SITE
   c. REMOVE SNOW AND ICE TO PROVIDE SAFE ACCESS TO THE SITE AND EQUIPMENT ENCLOSURE.
   d. CLEAN EXPOSED EXTERIOR AND INTERIOR HARD-SURFACED FINISHES TO A DIRT-FREE CONDITION, FREE OF STAINS, FILMS AND SIMILAR FOREIGN SUBSTANCES. AVOID DISTURBING NATURAL WEATHERING OF EXTERIOR SURFACES.
   e. REMOVE DEBRIS FROM LIMITED ACCESS SPACES, INCLUDING ROOFS, EQUIPMENT ENCLOSURE, MANHOLES, AND SIMILAR SPACES.
   f. TOUCH-UP AND OTHERWISE REPAIR AND RESTORE MARRED EXPOSED FINISHES AND SURFACES. REPLACE FINISHES AND SURFACES THAT CAN NOT BE SATISFACTORILY REPAIRED OR RESTORED, OR THAT SHOW EVIDENCE OF REPAIR OR RESTORATION. DO NOT PAINT OVER “UL” AND SIMILAR LABELS, INCLUDING ELECTRICAL NAME PLATES.
   g. LEAVE THE PROJECT CLEAN AND READY FOR OCCUPANCY
2. REMOVAL OF PROTECTION: REMOVE TEMPORARY PROTECTION AND FACILITIES INSTALLED DURING CONSTRUCTION TO PROTECT PREVIOUSLY COMPLETED INSTALLATIONS DURING THE REMAINDER OF THE CONSTRUCTION PERIOD.

DIVISION 2: SITE WORK

SECTION 02200 - EARTHWORK AND DRAINAGE

PART 1 - GENERAL

1. WORK INCLUDED: SEE SITE PLAN.
2. SEQUENCING
   a. CONSTRUCT TEMPORARY CONSTRUCTION AREA ALONG EAST FENCE LINE.
   b. GRADE, SEED, FERTILIZE, AND MULCH ALL AREAS DISTURBED BY CONSTRUCTION (INCLUDING UNDERGROUND UTILITY EASEMENTS) IMMEDIATELY AFTER BRINGING LEASE AREA AND ACCESS DRIVE W/ TURNAROUND TO BASE COURSE ELEVATION, WATER TO ENSURE GROWTH

PART 2 - EXECUTION

1. INSPECTIONS: LOCAL BUILDING INSPECTORS SHALL BE NOTIFIED NO LESS THAN 48 HOURS IN ADVANCE OF CONCRETE POURS, UNLESS OTHERWISE SPECIFIED BY JURISDICTION.
2. PREPARATION
   a. CLEAR TREES, BRUSH AND DEBRIS FROM SITE AS REQUIRED.
   b. PRIOR TO OTHER EXCAVATION AND CONSTRUCTION, GRUB ORGANIC MATERIAL TO A MINIMUM OF SIX INCHES (6”) BELOW GRADE.
   c. UNLESS OTHERWISE INSTRUCTED BY OWNER, TRANSPORT ALL REMOVED TREES, BRUSH AND DEBRIS FROM THE PROPERTY TO AN AUTHORIZED LANDFILL.
   d. PRIOR TO PLACEMENT OF FILL OR BASE MATERIALS, ROLL THE SOIL.
   e. WHERE UNSTABLE SOIL CONDITIONS ARE ENCOUNTERED, LINE THE AREAS WITH STABILIZER MAT PRIOR TO PLACEMENT OF FILL OR BASE MATERIAL.
3. INSTALLATION
   a. GRADE OR FILL THE SITE AS REQUIRED IN ORDER THAT UPON DISTRIBUTION OF SOILS, RESULTING FROM EXCAVATIONS, THE RESULTING GRADE WILL CORRESPOND WITH SAID SUB-BASE COURSE. ELEVATIONS ARE TO BE CALCULATED FROM BENCHMARK, FINISHED GRADES, OR INDICATED SLOPES.
   b. CLEAR EXCESS SPOILS, IF ANY, FROM JOB SITE AND DO NOT SPREAD BEYOND THE LIMITS OF PROJECT AREA UNLESS AUTHORIZED BY PROJECT MANAGER AND AGREED TO BY LANDOWNER.
   c. AVOID CREATING DEPRESSIONS WHERE WATER MAY POND.
   d. THE CONTRACT SHALL INCLUDE GRADING, BANKING, AND DITCHING, UNLESS OTHERWISE INDICATED.
   e. PLACE FILL OR STONE IN SIX INCH (6”) MAXIMUM LIFTS, AND COMPACT BEFORE PLACING NEXT LIFT.
   f. THE TOP SURFACE COURSE, SHALL EXTEND A MINIMUM OF ONE FOOT (1') BEYOND THE SITE FENCE (UNLESS OTHERWISE NOTED) AND SHALL COVER THE AREA AS INDICATED.
   g. APPLY SEED, FERTILIZER, AND STRAW COVER TO ALL OTHER DISTURBED AREAS, DITCHES, AND DRAINAGE SWALES, NOT OTHERWISE RIPRAP.
   h. UNDER NO CIRCUMSTANCES WILL DITCHES, SWALES, OR CULVERTS BE PLACED SO THAT THEY DIRECT WATER TOWARDS, OR PERMIT STANDING WATER IMMEDIATELY ADJACENT TO SHELTER OR EQUIPMENT. IF DESIGNS OR ELEVATIONS ARE IN CONFLICT WITH THIS, ADVISE CONSTRUCTION MANAGER IMMEDIATELY.
   i. APPLY SEED, FERTILIZER, AND STRAW COVER TO ALL OTHER DISTURBED AREAS, DITCHES, AND DRAINAGE SWALES, NOT OTHERWISE RIPRAP.
   j. UNDER NO CIRCUMSTANCES WILL DITCHES, SWALES, OR CULVERTS BE PLACED SO THAT THEY DIRECT WATER TOWARDS, OR PERMIT STANDING WATER IMMEDIATELY ADJACENT TO SHELTER OR EQUIPMENT. IF DESIGNS OR ELEVATIONS ARE IN CONFLICT WITH THIS, ADVISE CONSTRUCTION MANAGER IMMEDIATELY.
   k. IN DITCHES WITH SLOPES GREATER THAN 10% MOUND DIVERSIONARY HEADWALLS IN THE DITCH AT CULVERT ENTRANCES. POSITION THE HEADWALL AT AN ANGLE NO GREATER THAN THAT 60^ OFF THE DITCH LINE. RIPRAP THE UPSTREAM SIDE OF THE HEADWALL AS WELL AS THE DITCH FOR SIX FEET (6') ABOVE THE CULVERT ENTRANCE.
   l. APPLY SEED AND FERTILIZER TO SURFACE CONDITIONS WHICH WILL ENCOURAGE ROOTING. RAKE AREAS TO BE SEEDED TO EVEN THE SURFACE AND LOOSEN THE SOIL.
   m. SOW SEED IN TWO DIRECTIONS IN TWICE THE QUANTITY RECOMMENDED BY THE SEED PRODUCER.
   n. ENSURE GROWTH OF SEEDED AND LANDSCAPED AREAS, BY WATERING, UP TO THE POINT OF RELEASE FROM THE CONTRACT. CONTINUE TO REWORK THE BARE AREAS UNTIL COMPLETE COVERAGE IS OBTAINED.
4. FIELD QUALITY CONTROL: COMPACT SOILS TO MAXIMUM DENSITY IN ACCORDANCE WITH ASTM D-1557. AREAS OF SETTLEMENT WILL BE EXCAVATED AND REFILLED AT CONTRACTOR'S EXPENSE. INDICATE PERCENTAGE OF COMPACTION ACHIEVED ON AS-BUILT DRAWINGS.
5. PROTECTION
   a. PROTECT SEEDED AREAS FROM EROSION BY SPREADING STRAW TO A UNIFORM LOOSE DEPTH OF 1-2 INCHES, STAKE AND TIE DOWN AS REQUIRED. USE OF EROSION CONTROL MESH OR MULCH NET WILL BE AN ACCEPTABLE ALTERNATIVE.
   b. PROTECT ALL EXPOSED AREAS AGAINST WASHOUTS AND SOIL EROSION. PLACE STRAW BALES AT THE INLET APPROACH TO ALL NEW OR EXISTING CULVERTS. WHERE THE SITE OR ROAD AREAS HAVE BEEN ELEVATED IMMEDIATELY ADJACENT TO THE RAIL LINE, STAKE EROSION CONTROL FABRIC FULL LENGTH IN THE SWALE TO PREVENT CONTAMINATION OF THE RAIL BALLAST. ALL EROSION CONTROL METHODS SHALL CONFORM TO APPLICABLE BUILDING CODE REQUIREMENTS.

SECTION 02830 - FENCING AND GATE(S)

PART 1 - GENERAL

1. WORK INCLUDED - SEE PLAN FOR SITE AND LOCATION OF FENCE
2. QUALITY ASSURANCE
   a. ALL STEEL MATERIALS UTILIZED IN CONJUNCTION WITH THIS SPECIFICATION WILL BE GALVANIZED OR STAINLESS STEEL. WEIGHT OF ZINC COATING ON THE FABRIC SHALL NOT BE LESS THAN 12 OUNCES PER SQUARE FOOT OF MATERIAL COVERED. POSTS SHALL BE HOT-DIPPED IN GRADE “E” ZINC, 18 OUNCES PER SQUARE FOOT.
3. SEQUENCING
   a. IF THE SITE AREA HAS BEEN BROUGHT UP TO SURFACE COURSE ELEVATION (PRIOR TO THE FENCE CONSTRUCTION), FENCE POST EXCAVATION SPOILS MUST BE CONTROLLED TO PRECLUDE CONTAMINATION OF SAID SURFACE COURSE.
4. SUBMITTALS
   a. MANUFACTURER'S DESCRIPTIVE LITERATURE.
   b. CERTIFICATE OR STATEMENT OF COMPLIANCE WITH THE SPECIFICATIONS.

PART 2 - PRODUCTS

1. FENCE MATERIAL
   a. ALL FABRIC WIRE, RAILS, HARDWARE, AND OTHER STEEL MATERIALS SHALL BE HOT-DIPPED GALVANIZED.
   b. FABRIC SHALL BE SEVEN-FOOT (7') HIGH OR TO MATCH EXISTING FENCE TWO-INCH CHAIN LINK MESH OF NO. 9 GAUGE (0.148”) WIRE. THE FABRIC SHALL HAVE A KNUCKLED FINISH FOR THE TOP SELVAGES. FABRIC SHALL CONFORM TO THE SPECIFICATIONS OF ASTM A-392 CLASS 1.
   c. ALL POSTS SHALL BE SCHEDULE - 40 MECHANICAL SERVICE PIPE AND SHALL BE TYPE 1 ASTM A-128 AND OF THE FOLLOWING DIAMETER
      i. LINE 2” SCHEDULE 40 (2 3/8” O.D.)
      ii. CORNER 3” SCHEDULE 40 (3 1/2” O.D.)
      iii. GATE 3” SCHEDULE 40 (3 1/2” O.D.)
   d. ALL TOP AND BRACE RAILS SHALL BE 1 DIAMETER SCHEDULE - 40 MECHANICAL - SERVICE PIPE.
   e. GATE FRAMES AND BRACES SHALL BE 1.90 INCH DIAMETER SCHEDULE 40 MECHANICAL - SERVICE PIPE. FRAMES SHALL HAVE WELDED CORNERS.
   f. GATE FRAMES SHALL HAVE A FULL-HEIGHT VERTICAL BRACE, AND A FULL-WIDTH HORIZONTAL BRACE, SECURED IN PLACE BY USE OF GATE BRACE CLAMPS.
   g. GATE HINGES SHALL BE MERCHANTS METAL MODEL 64386 HINGE ADAPTER WITH MODEL 6409, 188-DEGREE ATTACHMENT.
   h. A NO. 7 GAUGE ZINC COATED TENSION WIRE SHALL BE USED AT THE BOTTOM OF THE FABRIC, TERMINATED WITH BAND CLIPS AT CORNER AND GATE POSTS.
   i. A SIX-INCH BY 1/2-INCH DIAMETER EYEBOLT TO HOLD TENSION WIRE SHALL BE PLACED AT LINE POSTS.
   j. STRETCHER BARS SHALL BE 3/16-INCH BY 3/4-INCH OR HAVE EQUIVALENT CROSS-SECTIONAL AREA.
   k. ALL CORNER GATE AND PANELS SHALL HAVE A 3/8-INCH TRUSS ROD WITH TURNBUCKLES.
   l. ALL POST EXCEPT GATE POSTS SHALL HAVE A COMBINATION CAP AND BARBED WIRE SUPPORTING ARM. GATE POSTS SHALL HAVE A DOME CAP.
   m. OTHER HARDWARE INCLUDES BUT MAY NOT BE LIMITED TO TIE CLIPS, BAND CLIPS, AND TENSION BAND CLIPS.
   n. ALL CAPS SHALL BE MALLEABLE IRON, DOME OR ACORN SHAPED AS REQUIRED BY PIPE SIZE.

PART 3 - EXECUTION

1. INSPECTION: TO CONFIRM PROPER DEPTH AND DIAMETER OF POST HOLE EXCAVATIONS. ALL POST HOLES WILL BE EXCAVATED AS PER CONSTRUCTION DOCUMENTS,
2. INSTALLATION
   a. FOUNDATIONS SHALL HAVE A MINIMUM SIX INCH (6”) CONCRETE COVER UNDER POST.
   b. ALL FENCE POSTS SHALL BE VERTICALLY PLUMB; ON QUARTER INCH (1/4”)
   c. AT CORNER POSTS, GATE POSTS, AND SIDES OF GATE FRAME, FABRIC SHALL BE ATTACHED WITH STRETCHER AND TENSION BAND-CLIPS AT FIFTEEN (15) INCH INTERVALS.
   d. AT LINE POSTS, FABRIC SHALL BE ATTACHED WITH BAND-CLIPS AT FIFTEEN (15) INCH INTERVALS.
   e. FABRIC SHALL BE ATTACHED TO BRACE RAILS, TENSION WIRE AND TRUSS RODS WITH TIE-CLIPS AT TWO FOOT (2') INTERVALS.
   f. A MAXIMUM GAP OF ONE INCH WILL BE PERMITTED BETWEEN TIE CHAIN LINE FABRIC AND THE FINAL GRADE.
   g. GATE SHALL BE INSTALLED SO LOCKS ARE ACCESSIBLE FROM BOTH SIDES.
   h. GATE HINGE BOLTS SHALL HAVE THEIR THREADS PEENED OR WELDED TO PREVENT UNAUTHORIZED REMOVAL.
   i. CONCRETE TO BE A MINIMUM OF 4,000 PSI AT 7 DAYS. CEMENT SHALL EXCEED ASTM C150, TYPE IIIA.
3. PROTECTION: UPON COMPLETION OF ERECTION, INSPECT FENCE MATERIAL AND PAINT FIELD CUTS OR GALVANIZING BREAKS WITH ZINC-BASED PAINT, COLOR TO MATCH THE GALVANIZED METAL. APPLICABLE STANDARDS:

ASTM-A120	SPECIFICATION FOR PIPE, STEEL, BLACK AND HOT-DIPPED ZINC COATED (GALVANIZED) WELDED AND SEAMLESS, FOR ORDINARY USES.
ASTM-A123	ZINC (HOT-DIP GALVANIZED) COATING ON IRON AND STEEL PRODUCTS.
ASTM-A153	STANDARD SPECIFICATION FOR ZINC COATING (HOT-DIP) ON IRON AND STEEL HARDWARE.
ASTM-A392	SPECIFICATION FOR ZINC-COATED STEEL CHAIN LINK FENCE FABRIC.
ASTM-A491	SPECIFICATION FOR ALUMINUM-COATED STEEL CHAIN LINK FENCE FABRIC
ASTM-A525	STANDARD SPECIFICATION FOR STEEL SHEET ZINC COATED (GALVANIZED) BY THE HOT-DIPPED PROCESS.
ASTM-A570	SPECIFICATION FOR HOT-ROLLED CARBON STEEL SHEET AND STRIP. STRUCTURAL QUALITY.

A. FEDERAL SPECIFICATION RR-F-191-FENCING, WIRE AND POST METAL (AND GATES, CHAIN LINK FENCE FABRIC, AND ACCESSORIES)

DIVISION 3: CONCRETE

SECTION 03000 - BASIC CONCRETE MATERIALS AND METHODS

PART 1 - GENERAL

1. WORK INCLUDED: FORMWORK, REINFORCEMENT, ACCESSORIES, CAST-IN-PLACE CONCRETE, FINISHING, AND CURING.
2. INSPECTIONS
   a. CONTRACTOR IS RESPONSIBLE FOR SCHEDULING BUILDING DEPARTMENT INSPECTIONS REQUIRED FOR HIS SCOPE OF WORK.
   b. ALL REINFORCING STEEL SHALL BE INSPECTED AND APPROVED BY THE LESSEE'S CONSTRUCTION MANAGER PRIOR TO PLACEMENT OF CONCRETE.
   c. THE LESSEE'S CONSTRUCTION MANAGER SHALL BE NOTIFIED NO LESS THAN 48 HOURS IN ADVANCE OF CONCRETE POURS.
3. QUALITY ASSURANCE
   a. CONSTRUCT AND ERECT CONCRETE FORMWORK IN ACCORDANCE WITH ACI 301 AND ASTM 318.
   b. PERFORM CONCRETE REINFORCING WORK IN ACCORDANCE WITH ACI 301, ACI 318, AND ASTM A184.
   c. PERFORM CAST-IN-PLACE CONCRETE WORK IN ACCORDANCE WITH ACI 301, ACI 318, AND ACI 117-90.
   d. OPEN FOUNDATION TRENCHES SHALL BE INSPECTED BY MES PRIOR TO CONCRETE INSTALLATION.
4. SUBMITTALS: SUBMIT CONCRETE MIX AND REINFORCING STEEL SHOP DRAWINGS FOR APPROVAL BY LESSEE CONSTRUCTION MANAGER/ENGINEER. THE SHOP DRAWING SHALL BE SUBMITTED IN THE FORM OF TWO (2) CONCRETE MIX DESIGN INFORMATION SHEETS AND TWO (2) BLUELINE DRAWINGS FOR REINFORCING STEEL.

PART 2 - PRODUCTS

1. REINFORCEMENT MATERIALS
   a. REINFORCEMENT STEEL, ASTM A615, 60 ksi YIELD GRADE, DEFORMED BILLET STEEL BARS, PLAIN FINISH.
   b. WELDED STEEL WIRE FABRIC ASTM A185 PLAIN TYPE IN FLAT SHEETS, PLAIN FINISH.
   c. CHAIRS, BOLSTERS, BAR SUPPORTS, SPACERS. SIZED AND SHAPED FOR SUPPORTS OR REINFORCING.
   d. FABRICATE CONCRETE REINFORCING IN ACCORDANCE WITH ACI 315, ACI 318, ASTM A184.
2. CONCRETE MATERIALS
   a. CEMENT: ASTM C150, PORTLAND TYPE
   b. FINE AND COURSE AGGREGATES: ASTM C33 - MAXIMUM SIZE OF CONCRETE AGGREGATE SHALL NOT EXCEED; ONE INCH (1”) SIZE SUITABLE FOR INSTALLATION METHOD UTILIZED OR ONE-THIRD (1/3) CLEAR DISTANCE BEHIND OR BETWEEN REINFORCING.
   c. WATER: CLEAN AND NOT DETRIMENTAL TO CONCRETE
   d. AIR ENTRAINING ADMIXTURE: ASTM C260
   e. BONDING AGENT: LATEX EMULSION FOR BONDING NEW TO OLD CONCRETE AS MANUFACTURED BY DAYTON SUPERIOR.
   f. NON-SHRINK GROUT: PREMIXED COMPOUND CONSISTING OF NONMETALLIC AGGREGATE. CEMENT, WATER REDUCING AND PLASTICISING AGENTS.
3. CONCRETE MIX
   a. CONCRETE MATERIALS SHALL CONFORM TO THE APPROPRIATE A.C.I. REQUIREMENTS FOR EXPOSED STRUCTURAL CONCRETE.
   b. MIX AND DELIVER CONCRETE IN ACCORDANCE WITH ASTM C94, ALT. 3.
   c. PROPORTIONS OF CONCRETE MATERIALS SHALL BE SUITABLE FOR THE INSTALLATION METHOD UTILIZED AND SHALL RESULT IN DURABLE CONCRETE FOR LOCAL ANTICIPATED AGGRESSIVE ACTIONS. THE DURABILITY REQUIREMENTS OF ACI 318 CHAPTER 4 SHALL BE SATISFIED BASED ON THE CONDITIONS EXPECTED AT THE SITE. PROVIDE CONCRETE AS FOLLOWS:
      i. COMPRESSIVE STRENGTH: 4000 psi AT 7 DAYS. SEE SHEET 2-1 FOR CAISSON CONCRETE COMPRESSIVE STRENGTH.
      ii. SLUMP: 3 INCHES

PART 3 - EXECUTION

1. INSERTS, EMBEDDED COMPONENTS AND OPENINGS
   a. THE CONSTRACTOR SHALL COORDINATE AND CROSS-CHECK ARCHITECTURAL, BUILDING & ELECTRICAL DRAWINGS FOR OPENINGS, SLEEVES, ANCHORS, HANGERS, AND OTHER ITEMS RELATED TO CONCRETE WORK AND SHALL ASSUME FULL RESPONSIBILITY FOR THE PROPER LOCATION BEFORE PLACING CONCRETE.
   b. PROVIDE FORMED OPENINGS WHERE REQUIRED FOR WORK TO BE EMBEDDED IN AND PASSING THROUGH CONCRETE MEMBERS.
   c. COORDINATE WORK OF OTHER SECTIONS IN FORMING AND SETTING OPENING, SLOTS, RECESSES, CHASES, SLEEVES, BOLTS, ANCHORS, AND OTHER INSERTS.
   d. INSTALL CONRETE ACCESSORIES STRAIGHT, LEVEL AND PLUMB.
2. REINFORCEMENT PLACEMENT
   a. PLACEMENT REINFORCEMENT, SUPPORTED AND SECURED AGAINST DISPLACEMENT.
   b. ENSURE REINFORCING IS CLEAN, FREE OF LOOSE SCALE, DIRT, OR OTHER FOREIGN COATINGS.
   c. WELDING IS PROHIBITED ON REINFORCING STEEL AND EMBEDMENTS.
   d. MINIMUM CONCRETE COVER FOR REINFORCING SHALL BE THREE INCHES (3”) UNLESS OTHERWISE NOTED.
   e. CONCRETE COVER FROM TOP OF FOUNDATION TO ENDS OF VERTICAL REINFORCEMENT SHALL NOT EXCEED THREE INCHES (3”) NOR BE LESS THAN TWO INCHES (2”).
3. PLACING CONCRETE
   a. VIBRATE ALL CONCRETE.
   b. ALL CONCRETE WORK SHALL ADHERE TO THE LATEST A.C.I. STANDARDS FOR WINTER POURING AND CURING PROCECURES IF SEASONAL CONDITIONS APPLY.
4. CURING
   a. AFTER PLACEMENT, PROTECT CONCRETE FROM PREMATURE DRYING.
   b. MAINTAIN CONCRETE WITH MINIMAL MOISTURE LOSS AT RELATIVELY CONSTANT TEMPERATURE FOR A PERIOD NECESSARY FOR HYDRATION OF CEMENT AND HARDENING OF CONCRETE.
5. PROVIDE HAND RUBBED SMOOTH FINISH TO ALL EXPOSED VERTICAL FORMED CONCRETE SURFACES.
6. FIELD QUALITY CONTROL
   a. SUBMIT THREE (3) CONCRETE TEST CYLINDERS - TAKEN FOR EVERY 15 CUBIC YARD OR LESS. SUBMIT CONCRETE TESTS TO THE PROJECT MANAGER IN ACCORDANCE WITH ASTM, C-31 AND C-39.
   b. SUBMIT ONE (1) ADDITIONAL TEST CYLINDER - TAKEN DURING COLD WEATHER POURS, AND CURED ON JOB SITE UNDER SAME CONDITIONS AS CONCRETE IT REPRESENTS.
   c. SUBMIT ONE (1) SLUMP TEST - TAKEN FOR EACH SET OF TEST CYLINDERS TAKEN.
7. DEFECTIVE CONCRETE: MODIFY OR REPLACE CONCRETE NOT CONFORMING TO REQUIRED LINES, DETAILS OR ELEVATIONS AT COST OF GC, AS DIRECTED BY ARCHITECT/ENGINEER.

CHICAGO SMSA
limited partnership
d/b/a VERIZON WIRELESS

TERRA CONSULTING GROUP, LTD.
600 BUSSE HIGHWAY
PARK RIDGE, IL 60068
PH: 847-698-6400
FAX: 847-698-6401

REVISIONS

NO.	DESCRIPTION	DATE	BY
3	FINAL PENDING FIBER	08/21/17	DMS
4	UPDATE WITH NEW ECR	08/31/17	JTM
5	UPDATE WITH NEW LAYOUT	09/06/17	DMS
6	FINALS WITH FINER	10/20/17	RA
7	ADDITION OF LANDSCAPING PLAN	12/29/17	JTM
8	UPDATE PER GAS COORDINATION	01/31/18	DMS
9	REVISED LANDSCAPE PLAN PER VILLAGE	04/05/18	JTM

LOC. # 311466

W 151ST
& S 80TH

15100 S 80TH AVE
ORLAND PARK, IL 60462

DRAWN BY:	PP
CHECKED BY:	TAZ
DATE:	07/23/15
PROJECT #:	33-1466

SHEET TITLE

SPECIFICATIONS

SHEET NUMBER

SP-1

DIVISION 5: METALS

PART1 1 - GENERAL

1. SECTION INCLUDES:

   STRUCTURAL STEEL FRAMING MEMBERS, BASE PLATES, PLATES, BARS, AND GROUTING UNDER BASE PLATES.

2. SUBMITTALS:

   SHOP DRAWINGS: INDICATE SIZES, SPACING, AND LOCATIONS OF STRUCTURAL MEMBERS, OPENINGS, CONNECTIONS, CAMBERS, LOADS, AND WELDED SECTIONS.

3. QUALITY ASSURANCE

   A. FABRICATE STRUCTURAL STEEL MEMBERS IN ACCORDANCE WITH AISC SPECIFICATIONS FOR THE DESIGN, FABRICATION AND ERECTION OF STRUCTURAL STEEL FOR BUILDINGS.

   B. PERFORM DESIGN UNDER DIRECT SUPERVISION OF A PROFESSIONAL STRUCTURAL ENGINEER LICENSED IN THE STATE.

PART 2 - PRODUCTS

1. MATERIALS:

A. STRUCTURAL STEEL MEMBERS:	ASTM A572, GRADE 50
B. STRUCTURAL TUBING:	ASTM A500, GRADE B
C. PIPE:	ASTM A53, TYPE E OR S, GRADE B
D. BOLTS, NUTS, AND WASHERS:	ASTM A325
E. ANCHOR BOLTS:	ASTM A307
F. WELDING MATERIALS:	AWS 01.1, TYPE REQUIRED FOR MATERIALS BEING WELDED
G. GROUT:	NON - SHRINK TYPE, PREMIXED COMPOUND CONSISTING OF NONMETALLIC AGGREGATE, CEMENT, WATER REDUCING AND PLASTICIZING ADDITIVES, CAPABLE OF DEVELOPING A MINIMUM COMPRESSIVE STRENGTH OF 7000 PSI AT 28 DAYS.
H. SHOP AND TOUCH-UP PRIMER:	SSPC 15, TYPE 1, RED OXIDE
I. TOUCH-UP PRIMER FOR GALV. SURFACES	ZINC RICH TYPE

2. FABRICATION:

   CONTINUOUSLY SEAL JOINTED MEMBERS BY CONTINOUS WELDS. GRIND EXPOSED WELDS SMOOTH.

3. FINISH:

   A. PREPARE STRUCTURAL COMPONENT SURFACES IN ACCORDANCEWITH SSPC SP-1 TO SP-10 PROCEDURES.

   B. STRUCTURAL STEEL MEMBERS SHALL BE HOT DIPPED GALVANIZED.

PART 3 - EXECUTION

1. EXAMINATION AND PREPARATION:

   VERIFY THAT THE FIELD CONDITIONS ARE ACCEPTABLE.

2. ERECTION:

   A. ALLOW FOR ERECTION LOADS. PROVIDE TEMPORARY BRACING TO MAINTAIN FRAMING IN ALIGNMENT UNTIL COMPLETION OF ERECTION AND INSTALLATION OF PERMANENT BRIDGING AND BRACING.

   B. FIELD WELD COMPONENTS INDICATED ON SHOP DRAWINGS.

   C. DO NOT FIELD CUT OR ALTER STRUCTURAL MEMBERS WITHOUT APPROVAL OF THE ARCHITECT/ENGINEER.

   D. AFTER ERECTION, TOUCH-UP WELDS, ABRASIONS, AND SURFACES NOT SHOP PRMED OR GALVANIZED WITH TOUCH-UP PRMERS AS SPECIFIED UNDER SECTION 05000, 0METALS, PART 2 - PRODUCTS, H & I. SURFACES TO BE IN CONTACT WITH CONCRETE NOT INCLUDED.

3. FIELD QUALITY CONTROL:

   FIELD INSPECTION OF MEMBERS, CONNECTIONS, WELDS, AND TOURQUING

DIVISION 16: ELECTRICAL

SECTION 16050 - BASIC ELECTRICAL MATERIALS AND METHODS

1. CONTRACTOR SHALL REVIEW THE CONTRACT DOCUMENTS PRIOR TO ORDERING THE ELECTRICAL EQUIPMENT AND STARTING THE ACTUAL CONSTRUCTION. CONTRACTOR SHALL ISSUE A WRITTEN NOTICE OF ALL FINDINGS TO THE ARCHITECT LISTING ANY DISCREPANCIES OR CONFLICTING INFORMATION.
2. ELECTRICAL PLANS, DETAILS AND DIAGRAMS ARE DIAGRAMMATIC ONLY. VERIFY EXACT LOCATIONS AND MOUNTING HEIGHTS OF ELECTRICAL EQUIPMENT WITH OWNER PRIOR TO INSTALLATION.
3. EACH CONDUCTOR OF EVERY SYSTEM SHALL BE PERMANENTLY TAGGED IN EACH PANELBOARD, PULLBOX, JUNCTION BOX, SWITCH BOX, ETC. THE TYPE OF TAGGING METHODS SHALL BE IN COMPLIANCE WITH OCCUPATIONAL SAFETY AND HEALTH ADMINISTRATION (O.S.H.A).
4. ALL MATERIALS AND EQUIPMENT SHALL BE NEW AND IN GOOD WORKING CONDITION WHEN INSTALLED AND SHALL BE OF THE BEST GRADE AND OF THE SAME MANUFACTURER THROUGHOUT FOR EACH CLASS OR GROUP OF EQUIPMENT. MATERIALS SHALL BE LISTED "J" WHERE APPLICABLE. MATERIALS SHALL MEET WITH APPROVAL OF ALL GOVERNING BODIES HAVING JURISDICTION. MATERIALS SHALL BE MANUFACTURED IN ACCORDANCE WITH APPLICABLE STANDARDS ESTABLISHED BY ANSI, NEMA, NBFU, AND 'UL" LISTED.
5. ALL CONDUIT SHALL HAVE A PULL CORD.
6. PROVIDE PROJECT MANAGER WITH ONE SET OF COMPLETE ELECTRICAL "AS INSTALLED" DRAWINGS AT THE COMPLETION OF TH JOB, SHOWING ACTUAL DIMENSIONS, ROUTINGS, AND CIRCUITS.
7. ALL CIRCUIT BREAKERS, FUSES AND ELECTRICAL EQUIPMENT SHALL HAVE AN INTERRUPTING SHORT CIRCUIT CURRENT TO WHICH THEY MAY BE SUBJECTED, AND A MINIMUM OF 10,000 A.I.C.
8. THE ENTIRE ELECTRICAL INSTALLATION SHALL BE GROUNDED AS REQUIRED BY UBC, NEC AND ALL APPLICABLE CODES.
9. PATCH, REPAIR AND PAINT ANY AREA THAT HAS BEEN DAMAGED IN THE COURSE OF THE ELECTRICAL WORK.
10. PLASTIC PLATES FOR ALL SWITCHES, RECEPTACLES, TELEPHONE AND BLANKED OUTLETS SHALL HAVE ENGRAVED LETTERING WHERE INDICATED ON THE DRAWINGS. WEATHERPROOF RECEPTACLES SHALL HAVE SIERRA #WPD-8 LIFT COVERPLATES.

SECTION 1640 - SERVICE AND DISTRIBUTION

1. WIRE AND CABLE CONDUCTORS SHALL BE COPPER, 600V, TYPE THHN OR THWN, WITH A MIN. SIZE OF #12 AWG, COLOR CODED. ALL RECTIFIER DROPS SHALL BE STRANDED TO ACCEPT CRIMP CONNECTORS.
2. ALL CHEMICAL GROUND RODS SHALL BE "UL" APPROVED.
3. METER SOCKET AMPERES, VOLTAGE, NUMBER OF PHASES SHALL BE AS NOTED ON THE DRAWINGS. MANUFACTURED BY MILBANK OR APPROVED EQUAL, AND SHALL BE UTILITY COMPANY APPROVED.
4. CONDUIT:

   A. RIGID CONDUIT SHALL BE U.L LABEL GALVANIZED ZINC COATED WITH GALVANIZED ZINC INTERIOR AND SHALL BE USED WHEN INSTALLED IN OR UNDER CONCRETE SLABS, IN CONTACT WITH THE EARTH, UNDER PUBLIC ROADWAYS, IN MASONRY WALLS OR EXPOSED ON BUILDING EXTERIOR. RIGID CONDUIT IN CONTACT WITH EARTH SHALL BE ½ LAPPED WRAPPED WITH HUNTS WRAP PROCESS NO. 3.

   B. ELECTRICAL METALLIC TUBING SHALL HAVE U.L. LABEL, FITTING SHALL BE GLAND RING COMPRESSION TYPE.

   C. FLEXIBLE METALLIC CONDUIT SHALL HAVE U.L. LISTED LABEL AND MAY BE USED WHERE PERMITTED BY CODE. FITTINGS SHALL BE "JAKE" OR SQUEEZE" TYPE. ALL FLEXIBLE CONDUITS SHALL HAVE FULL LENGTH GROUND WIRE.

   D. ALL UNDERGROUND CONDUIT SHALL BE AS NOTED ON THE DRAWINGS AT A MINIMUM DEPTH OF 42" BELOW GRADE. IT IS REQUIRED AND WILL BE THE RESPONSIBILITY OF THE ELECTRICAL CONTRACTOR TO NOTIFY J.U.L.I.E. AT 1-800-892-0123 OR OTHER SUCH NOTIFYING AGENCY FORTY-EIGHT (48) HOURS PRIOR TO DIGGING.

5. CONTRACTOR TO COORDINATE WITH UTILITY COMPANY FOR CONNECTION OF TEMPORARY AND PERMANENT POWER TO THE SITE. THE TEMPORARY POWER AND ALL HOOKUP COSTS ARE TO BE PAID BY THE CONTRACTOR.
6. ALL ELECTRICAL EQUIPMENT SHALL BE LABELED WITH PERMANENT ENGRAVED PLASTIC LABELS WITH WHITE ON BLUE BACKGROUND LETTERING (MINIMUM LETTER HEIGHT SHALL BE ONE FORTH INCH (1/4'). NAMEPLATES SHALL BE FASTENED WITH STAINLESS STEEL SCREWS, NOT ADHESIVE.
7. UPON COMPLETION OF WORK, CONDUCT CONTINUITY, SHORT CIRCUIT, AND FALL POTENTIAL GROUNDING TESTS BY AN INDEPENDENT TESTING SERVICE ENGAGED BY THE CONTRACTOR SHALL BE SUBMITTED FOR APPROVAL. SUBMIT TEST REPORTS TO PROJECT MANAGER. CLEAN PREMISES OF ALL DEBRIS RESULTING FROM WORK AND LEAVE WORK IN A COMPLETE AND UNDAMAGED CONDITION.
8. GROUNDING ELECTRODE SYSTEM

   A. PREPARATION

1. SURFACE PREPARATION:

   ALL CONNECTIONS SHALL BE MADE TO BARE METAL. ALL PAINTS

   SURFACES SHALL BE FIELD INSPECTED AND MODIFIED TO ENSURE PROPER CONTACT. NO WASHERS ARE ALLOWED BETWEEN THE ITEMS BEING GROUND. ALL CONNECTIONS ARE TO HAVE A NO-OXIDIZING GENT APPLIED PRIOR TO INSTALLATION.

2. GROUND BAR PREPARATION

   ALL COPPER GROUND BARS SHALL BE CLEANED, POLISHED AND A NON-OXIDIZING AGENT APPLIED. NO FINGERPRINTS OR DISCOLORED COPPER WILL BE PERMITTED.

3. SLEEVES:

   ALL GROUNDING CONDUCTORS SHALL RUN THROUGH PVC SLEEVES WHEREVER CONDUCTORS RUN THROUGH WALLS, FLOORS OR CEILINGS. IF CONDUCTORS MUST RUN THROUGH EMT, BOTH ENDS OF CONDUIT SHALL BE GROUNDED. SEAL BOTH ENDS OF CONDUIT WITH SILICONE CAULK.

   B. GROUND BARS

1. ALL GROUND BARS SHALL BE ONE FORTH INCH (1/4" THICK TINNED COPPER PLATE AND OF AND OF SIZE INDICATED ON DRAWINGS.
2. ALL CONNECTIONS TO THE GROUND BAR SHALL OBSERVE THE FOLLOWING SEQUENCE:

   A. BOLT-HEAD

   B. 2-HOLE LUG

   C. TINNED COPPER BUSS BAR

   D. STAR WASHER

   E. NUT

   C. EXTERNAL CONNECTIONS

1. ALL BURIED GROUNDING CONNECTIONS SHALL BE MADE BY THE EXOTHERMIC WELD PROCESS. CONNECTIONS SHALL INCLUDE ALL CABLE TO CABLE, SPLICES, TEE'S, CROSSES, ETC. ALL CABLE TO GROUND RODS, GROUND ROD SPLICES AND LIGHTNING PROTECTION SYSTEMS ARE TO BE AS INDICATED. ALL MATERIALS USED (MOLDS, WELDING METAL, TOOLS, ETC.) SHALL BE BY "CADWELD" AND INSTALLED PER MANUFACTURER'S RECOMMENDED PROCEDURES.
2. ALL ABOVE GRADE GROUNDING AND BONDING CONDUCTORS SHALL BE CONNECTED BY TWO HOLE CRIMP TYPE (COMPRESSION) CONNECTIONS (EXCEPT FOR THE ACEG AND GROUND ROD) MECHANICAL CONNECTIONS, FITTINGS OR CONNECTIONS THAT DEPEND SOLELY ON SOLDIER SHALL NOT BE USED. ALL CABLE TO CABLE CONNECTIONS SHALL BE HIGH PRESSURE DOUBLE CRIMP TYPE CONNECTIONS. CONNECTIONS TO STRUCTURAL STEEL SHALL BE EXOTHERMIC WELDS.

   D. GROUND RODS

   ALL GROUND RODS SHALL BE 5/8 -INCH DIAMETER X 10' -0" LONG "COPPERWELD" OR APPROVED EQUAL, OF THE NUMBER AND LOCATIONS INDICATED. GROUND RODS SHALL BE DRIVEN FULL LENGTH VERTICAL IN UNDISTURBED EARTH.

   E. GROUND RODS

   ALL GROUND RODS SHALL BE STANDARD TINNED SOLID BARE COPPER ANNEALED, AND OF SIZE INDICATED ON DRAWINGS UNLESS NOTED OTHERWISE.

   F. LUGS

1. LUGS SHALL BE 2 - HOLE, LONG BARREL, STRAND COPPER UNLESS OTHERWISE

   SPECIFIED IN THE CONTRACT DOCUMENTS. LUGS SHALL BE THOMAS AND BETTS SERIES #548_ _BE OR EQUIVALENT

A. 535 MCM DLO	54880BE
B. 262 MCM DLO	54872BE
C. #1/0 DLO	54862BE
D. #4/0 THWN AND BARE	54866BE
E. #2/0 THWN	54862BE
F. #2 THHN	54207BE
G. #6 DLO	54205BE

2. WHEN THE DIRECTION OF THE CONDUCTOR MUST CHANGE, IT SHALL BE DONE GRADUALLY. THE CURVATURE OF THE TURN SHALL BE DONE IN ACCORDANCE WITH THE FOLLOWING CHART:

	GROUNDING CONDUCTOR SIZE	MINIMUM BENDING RADIUS TO INSIDE EDGE
NO.	6 AWG TO NO. 4 AWG	6 INCHES
NO.	2 AWG TO NO. 1/0 AWG	8 INCHES
NO.	2/0 AWG TO 4/0 MCM	12 INCHES
	250 MCM TO 750 MCM	24 INCHES

G. GROUND RING

1. THE EXTERNAL GROUND RING ENCIRCLING THE TOWER (IF APPLICABLE) AND BETWEEN

   BETWEEN THE EQUIPMENT SHELTER PLATFORM ANCHORS SHALL BE MINIMUM NO. 2 A.W.G SOLID TINNED BARE COPPER CONDUCTOR IN DIRECT CONTACT WITH THE EARTH AT THE DEPTH INDICATED ON THE DRAWINGS. CONDUCTOR BENDS SHALL HAVE A

   MINIMUM BENDING RADIUS OF EIGHT INCHES (8").

2. ALL EXTERNAL GROUND RINGS ARE TO BE JOINED TOGETHER AND ALL CONNECTIONS MUST BE CADWELDED. NO LUNGS OR CLAMPS WILL BE ACCEPTED.

H. FENCE/GATE

GROUND EACH GATE POST, CORNER POST AND GATE AS INDICATED ON DRAWING GROUND CONNECTIONS TO FENCE POST AND ALL OTHER CONNECTIONS FOR THE GROUND GRID SYSTEM SHALL BE MADE BY EXOTHERMIC WELD PROCESS, AND INSTALLED PER MANUFACTURER'S RECOMMENDATIONS AND PROCEDURES, AND SPRAYED WITH COLD-GALVANIZED PAINT.

3. I.E.E.E. FALL POTENTIAL TESTS

A. FOR RAW LAND SITE

1. GROUND TESTS SHALL BE PERFORMED AS INDICATED ON DRAWINGS. A BIDDLE GROUND OHMER OR THE METHOD OF USING TWO AUXILIARY GROUND RODS (AS DESCRIBED IN I.E.E.E. STANDARDS NO. 81-1983, PART 1) MAY BE USED. THE I.E.E.E. METHOD REQUIRES THE USE OF AN A.C. TEST CURRENT. THE AUXILIARY TEST RODS MUST BE SUFFICIENTLY FAR AWAY FROM THE ROD UNDER TEST SO THAT THE REGIONS IN WHICH THEIR RESISTANCE IS LOCALIZED DO NOT OVERLAP. THE TEST POINT WILL BE GROUND ROD AND WILL CONSIST OF THE THREE POINT FALL OF POTENTIAL MEGGER TEST METHOD, USING THE BIDDLE NULL-BALANCE EARTH TESTER (MEGGER #250220-2 OR EQUIVALENT)
2. CONTRACTOR TO CONDUCT GROUND RESISTANCE TEST IN THE FORMAT AS FOLLOWS:

   B. EQUIPMENT PAD

1. FIRST TEST - SHALL BE WITH FOUR GROUND RODS INSTALLED, ONE AT EACH CORNER OF THE PAD BUT NOT CONNECTED TO THE MAIN GROUNDING BUS. FURNISH WIRE TO CONNECT (TEMPORARY CLAMP) ALL FOUR GROUND RODS TOGETHER TO MAKE A SYSTEM TEST AFTER EACH ROD IS INDIVIDUALLY TESTED. IF ANY INDIVIDUAL ROD TESTS 35 OHMS OR MORE, THE ELECTRICAL CONTRACTOR AND OWNER'S REPRESENTATIVE SHOULD BE NOTIFIED SO THAT THE ROD CAN BE DRIVEN DEEPER UNTIL ALL FOUR RODS HAVE A RESISTANCE OF 10 OHMS OR LESS ON A DRY DAY.
2. SECOND TEST- SHALL BE WITH THE GROUND RODS CONNECTED, WITH DRY SOIL AND WHEN NO STANDING WATER HAS BEEN PRESENT FOR THE PAST TEN (10) DAYS. THE MAXIMUM ALLOWABLE READING IS 5 OHMS TO GROUND. IF THE RESISTANCE OF THE ENTIRE SYSTEM EXCEEDS 5 OHMS, NOTIFY THE CONTRACTOR AND OWNER'S REPRESENTATIVE SO THAT ADDITIONAL AND/OR DEEPER RODS CAN BE INSTALLED.

   C. TOWER

1. FIRST TEST - SHALL BE WITH THREE GROUND RODS INSTALLED (MINIMUM), EQUALLY SPACED AROUND THE TOWER FOUNDATION, BUT NOT CONNECTED TO THE SHELTER PAD EXTERNAL GROUND RING. FURNISH WIRE TO CONNECT (TEMPORARY CLAMP) ALL THREE GROUND RODS TOGETHER TO MAKE A SYSTEM TEST AFTER EACH ROD IS INDIVIDUALLY TESTED. IF ANY INDIVIDUAL ROD TESTS 25 OHMS OR MORE, NOTIFY THE CONTRACTOR AND OWNER'S REPRESENTATIVE SO THAT THE ROD CAN BE DRIVEN DEEPER UNTIL ALL THREE (3) RODS HAVE A RESISTANCE OF 10 OHMS OR LESS ON A DRY DAY.
2. SECOND TEST- SHALL BE WITH THE GROUND RODS CONNECTED, WITH DRY SOIL AND WHEN NO STANDING WATER HAS BEEN PRESENT FOR THE PAST (10) DAYS, THE MAXIMUM ALLOWABLE READING IS 5 OHMS THE ELECTRICAL CONTRACTOR AND OWNER'S REPRESENTATIVE SHOULD BE NOTIFIED SO THAT EITHER ADDITIONAL AND/OR DEEPER RODS CAN BE INSTALLED.

   D. EQUIPMENT PAD AND TOWER

1. AFTER THE EQUIPMENT PAD AND TOWER GROUND RESISTANCE TEST IS COMPLETED, CONTRACTOR SHALL TIE EQUIPMENT PAD EXTERNAL GROUND RING AND TOWER EXTERNAL GROUND RING TOGETHER. AFTER FIRST AND SECOND TEST ALL CONNECTIONS MUST BE MADE USING EXOTHERMIC WELD. NO LUGS OR CLAMPS WILL BE ACCEPTED.
2. AFTER ALL THE EXTERNAL GROUND RINGS ARE TIED TOGETHER, COMPETE A MEGGER CHECKER OF THE GROUND SYSTEM SHOULD BE DONE. THE MAXIMUM ALLOWABLE LEADING IS 5 OHMS TO GROUND.

10. GROUNDING RESISTANCE TEST REPORT

UPON COMPLETION OF THE TESTING FOR EACH SITE, A TEST REPORT SHOWING RESISTANCE IN OHMS WITH AUXILIARY POTENTIAL ELECTRODES AT 5 FEET AND 10 FEET INTERVALS UNTIL THE AVERAGE RESISTANCE STARTS INCREASING AND ALSO NOTE THAT 10-15 PHOTOS MUST BE TAKEN TO PROOF ENTIRE EXTERNAL GROUND RING SYSTEM BEFORE BACKFILL. TWO (2) SETS OF TEST DOCUMENTS AREA OF THE INDEPENDENT TESTING SERVICE TO BE BOUND AND SUBMITTED WITHIN ONE (1) WEEK OF WORK COMPLETION.

SECTION 16503 - POLES, POSTS, AND STANDARDS
(SINGLE MAST AND SELF SUPPORTING TOWERS)

1. GENERAL

   A. LIGHTNING ROD AND EXTENSION PIPE INCLUDING ALL APPURTENANCES, TO BE FURNISHED BY OWNER, IF REQUIRED

   B. PROVIDE TEMPORARY LIGHTING FOR TOWER AS PER FAA REGULATIONS DURING CONSTRUCTION, IF REQUIRED.

   C. GROUNDING:

   GROUND TOWER WITH A MINIMUM OF #2 AWG TINNED SOLID BARE COPPER CONDUCTOR CADWELDED TO TOWER BASE PLATE. TWO (2) GROUNDING LEADS PER TOWER BASE PLATE.

   NO EXOTHERMIC WELDS SHALL BE ATTACHED DIRECTLY TO THE MONOPOLE TOWER SHAFT

SECTION 16745- TELECOMMUNICATIONS WIRING COMPONENT
(COAXIAL ANTENNA CABLE)

1. GENERAL

   A. ALL MATERIALS, PRODUCTS OR PROCEDURES INCORPORATED INTO WORK SHALL BE NEW AND OF STANDARD COMMERCIAL QUALITY.

   B. CERTAIN MATERIALS AND PRODUCTS WILL BE SUPPLIED BY THE OWNER (REFER TO GENERAL CONDITIONS FOR THE LIST OF OWNER FURNISHED EQUIPMENT, MATERIALS AND SUPPLIES FOR THESE ITEMS). THE CONTRACTOR IS RESPONSIBLE FOR PICKUP AND DELIVERY OF ALL SUCH MATERIALS

   C. ALL OTHER MATERIALS AND PRODUCTS SPECIFIED IN THE CONTRACT DOCUMENTS SHALL BE SUPPLIED BY THE CONTRACTOR.

2. MATERIALS

   a. COAXIAL CABLE:

1. INSTALL COAXIAL CABLE AND TERMINATIONS BETWEEN ANTENNAS AND EQUIPMENT PER MANUFACTURER'S RECOMMENDATIONS WITH COAXIAL CABLES SUPPORTED AT NO MORE THAN 3'-0" O.C. WEATHERPROOF ALL CONNECTORS BETWEEN THE ANTENNA AND EQUIPMENT PER MANUFACTURER'S REQUIREMENTS. TERMINATE ALL COAXIAL CABLE THREE FEET (3') IN EXCESS OF EQUIPMENT LOCATION UNLESS OTHERWISE STATED.
2. ALL COAX RUN LENGTHS GREATER THAN 175 FEET SHALL BE 1-5/8", ALL COAX. RUN LENGTH BETWEEN 101 FEET AND 174 FEET SHALL BE 1-1/4', AND IN LENGTH LESS THAN OR EQUAL TO 100 FEET SHALL BE 7/8".
3. ANTENNA AND COAXIAL CABLE GROUNDING

   a. ALL COAXIAL CABLE GROUNDING KITS ARE TO BE INSTALLED ON STRAIGHT RUNS OF COAXIAL CABLE (NOT WITHIN BENDS)

4. COAXIAL CABLE IDENTIFICATION

   a. TO PROVIDE EASY IDENTIFICATION AND UNIFORM MARKING OF ANTENNA CABLING, PLASTIC TAGS SHALL BE USED AT THE FOLLOWING LOCATIONS:

1. FIRST LOCATION IS AT THE END OF THE COAX NEAREST THE ANTENNA (WHERE THE COAXIAL CABLE AND JUMPER ARE CONNECTED).
2. SECOND LOCATION IS INSIDE THE EQUIPMENT SHELTER NEAR THE WAVEGUIDE ENTRY PORT.

   b. USE ANDREW CABLE TIES (PT. # 7290) TO SECURE IDENTIFICATION TAGS.

5. TESTING

   LESSEE SHALL PROVIDE AN INDEPENDENT TESTING AGENCY TO PERFORM THE COAXIAL SWEEP TEST & REPORT. THE CONTRACTOR IS TO PROVIDE ONE CLIMBER / QUALIFIED PERSONNEL TO ASSIST IN ANY REPAIRS AND WEATHERPROOFING ONCE THE TEST IS COMPLETE. THE CONTRACTOR IS TO PROVIDE LESSEE WITH A MINIMUM OF 48 HOURS NOTICE PRIOR TO THE TIME OF THE SWEEP TEST.

CHICAGO SMSA
limited partnership
d/b/a VERIZON WIRELESS

TERRA CONSULTING GROUP, LTD.
600 BUSSE HIGHWAY
PARK RIDGE, IL 60068
PH: 847-698-6400
FAX: 847-698-6401

REVISIONS

NO.	DESCRIPTION	DATE	BY
3	FINAL PENDING FIBER	08/21/17	DMS
4	UPDATE WITH NEW ECR	08/31/17	JTM
5	UPDATE WITH NEW LAYOUT	09/06/17	DMS
6	FINALS WITH FINER	10/20/17	RA
7	ADDITION OF LANDSCAPING PLAN	12/29/17	JTM
8	UPDATE PER GAS COORDINATION	01/31/18	DMS
9	REVISED LANDSCAPE PLAN PER VILLAGE	04/05/18	JTM

LOC. # 311466

W 151ST
& S 80TH

15100 S 80TH AVE
ORLAND PARK, IL 60462

DRAWN BY:	PP
CHECKED BY:	TAZ
DATE:	07/23/15
PROJECT #:	33-1466

SHEET TITLE

SPECIFICATIONS

SHEET NUMBER

SP-2

1 EXISTING OVERALL SITE
SCALE: N.T.S.

2 EXISTING ACCESS DRIVE
SCALE: N.T.S.

3 EXISTING SITE COMPOUND
SCALE: N.T.S.

4 EXISTING FENCED COMPOUND
SCALE: N.T.S.

5 EXISTING ACCESS GATE
SCALE: N.T.S.

6 EXISTING TRANSFORMER
SCALE: N.T.S.

7 EXISTING GENERATOR
SCALE: N.T.S.

8 EXISTING TOWER FOUNDATION
SCALE: N.T.S.

9 EXISTING TOWER TAG
SCALE: N.T.S.

CHICAGO SMSA
limited partnership
d/b/a VERIZON WIRELESS

TERRA CONSULTING GROUP, LTD.
600 BUSSE HIGHWAY
PARK RIDGE, IL 60068
PH: 847-698-6400
FAX: 847-698-6401

REVISIONS

NO.	DESCRIPTION	DATE	BY
3	FINAL PENDING FIBER	08/21/17	DMS
4	UPDATE WITH NEW ECR	08/31/17	JTM
5	UPDATE WITH NEW LAYOUT	09/06/17	DMS
6	FINALS WITH FINER	10/20/17	RA
7	ADDITION OF LANDSCAPING PLAN	12/29/17	JTM
8	UPDATE PER GAS COORDINATION	01/31/18	DMS
9	REVISED LANDSCAPE PLAN PER VILLAGE	04/05/18	JTM

LOC. # 311466

W 151ST
& S 80TH

15100 S 80TH AVE
ORLAND PARK, IL 60462

DRAWN BY:	PP
CHECKED BY:	TAZ
DATE:	07/23/15
PROJECT #:	33-1466

SHEET TITLE
EXISTING SITE PHOTOS

SHEET NUMBER
P-1

Master Plant List					
Symbol	Quantity	Botanical Name	Common Name	Size	Notes
Evergreen Trees					
TOT	4	THUJA OCCIDENTALIS 'TECHNY'	TECHNY ARBORVITAE	6' BB	
Deciduous Shrubs					
PF	12	POTENTILLA FRUITICOSA 'GOLD DROP'	GOLD DROP POTENTILLA	5 GAL	

GENERAL CONSTRUCTION NOTES

1. REQUIRED LANDSCAPE MATERIAL SHALL SATISFY AMERICAN ASSOCIATION OF NURSERYMEN STANDARDS AND BE STAKED, WRAPPED, WATERED AND MULCHED PER ORDINANCE.

2. BEFORE ANY EXCAVATION ON THE SITE, CALL TO LOCATE ANY EXISTING UTILITIES ON THE SITE. THE CONTRACTOR SHALL FAMILIARIZE HIM/HERSELF WITH THE LOCATIONS OF ALL BURIED UTILITIES IN THE AREAS OF WORK BEFORE STARTING OPERATIONS. THE CONTRACTOR SHALL BE LIABLE FOR THE COST OF REPAIRING OR REPLACING ANY BURIED CONDUITS, CABLES OR PIPING DAMAGED DURING THE INSTALLATION OF THIS WORK.

3. FENCING OR OTHER RIGID MATERIAL IS TO BE ERECTED AROUND THE DRIP-LINE OF ALL TREES TO BE SAVED.

4. CONTRACTOR TO NOTIFY LANDSCAPE ARCHITECT UPON DELIVERY OF PLANT MATERIAL TO THE SITE. LANDSCAPE ARCHITECT RESERVES THE RIGHT TO REJECT ANY PLANT MATERIAL THAT DOESN'T MEET STANDARDS OR SPECIFICATIONS OF THE PROJECT.

5. ALL SPECIFIED LANDSCAPE MATERIAL INDICATED ON THE CONSTRUCTION DOCUMENTS WILL BE REQUIRED TO BE MAINTAINED THROUGHOUT THE LIFE OF THE PROJECT AND MUST BE REPLACED SHOULD IT DIE OR BECOME DAMAGED.

6. ALL PLANT MATERIAL SHALL HAVE A ONE YEAR GUARANTEE FROM SUBSTANTIAL COMPLETION AS DETERMINED BY THE LANDSCAPE ARCHITECT, AND SHALL BE REPLACED SHOULD IT DIE WITHIN THAT PERIOD.

7. PROTECT STRUCTURES, SIDEWALKS, PAVEMENTS AND UTILITIES TO REMAIN FROM DAMAGE CAUSED BY SETTLEMENT, LATERAL MOVEMENT, UNDERMINING, WASHOUTS AND OTHER HAZARDS CAUSED BY SITE IMPROVEMENT OPERATIONS.

8. CAREFULLY MAINTAIN PRESENT GRADE AT BASE OF ALL EXISTING TREES TO REMAIN. PREVENT ANY DISTURBANCE OF EXISTING TREES INCLUDING ROOT ZONES. USE TREE PROTECTION BARRICADES WHERE INDICATED. PROTECT EXISTING TREES TO REMAIN AGAINST UNNECESSARY CUTTING, BREAKING OR SKINNING OF ROOTS, BRUISING OF BARK OR SMOTHERING OF TREES. DRIVING, PARKING, DUMPING, STOCKPILING AND/OR STORAGE OF VEHICLES, EQUIPMENT, SUPPLIES, MATERIALS OR DEBRIS ON TOP THE ROOT ZONES AND/OR WITHIN THE DRIPLINE OF EXISTING TREES OR OTHER PLANT MATERIAL TO REMAIN IS STRICTLY PROHIBITED.

9. THE CONTRACTOR AT ALL TIMES SHALL KEEP THE PREMISES ON WHICH WORK IS BEING DONE, CLEAR OF RUBBISH AND DEBRIS. ALL PAVEMENT AND DEBRIS REMOVED FROM THE SITE SHALL BE DISPOSED OF LEGALLY.

10. ALL WORK AND OPERATIONS SHALL COMPLY WITH ALL APPLICABLE FEDERAL, STATE AND LOCAL CODES AND ORDINANCES.

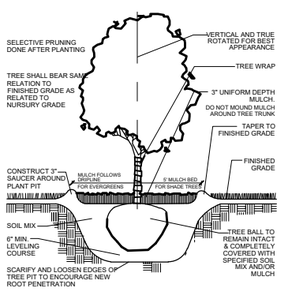

1 L1 TREE PLANTING DETAIL
SCALE: NO SCALE

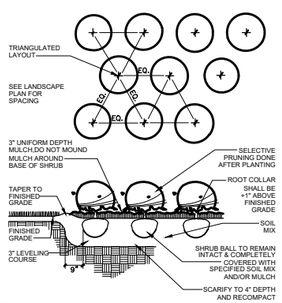

2 L1 SHRUB PLANTING DETAIL
SCALE:

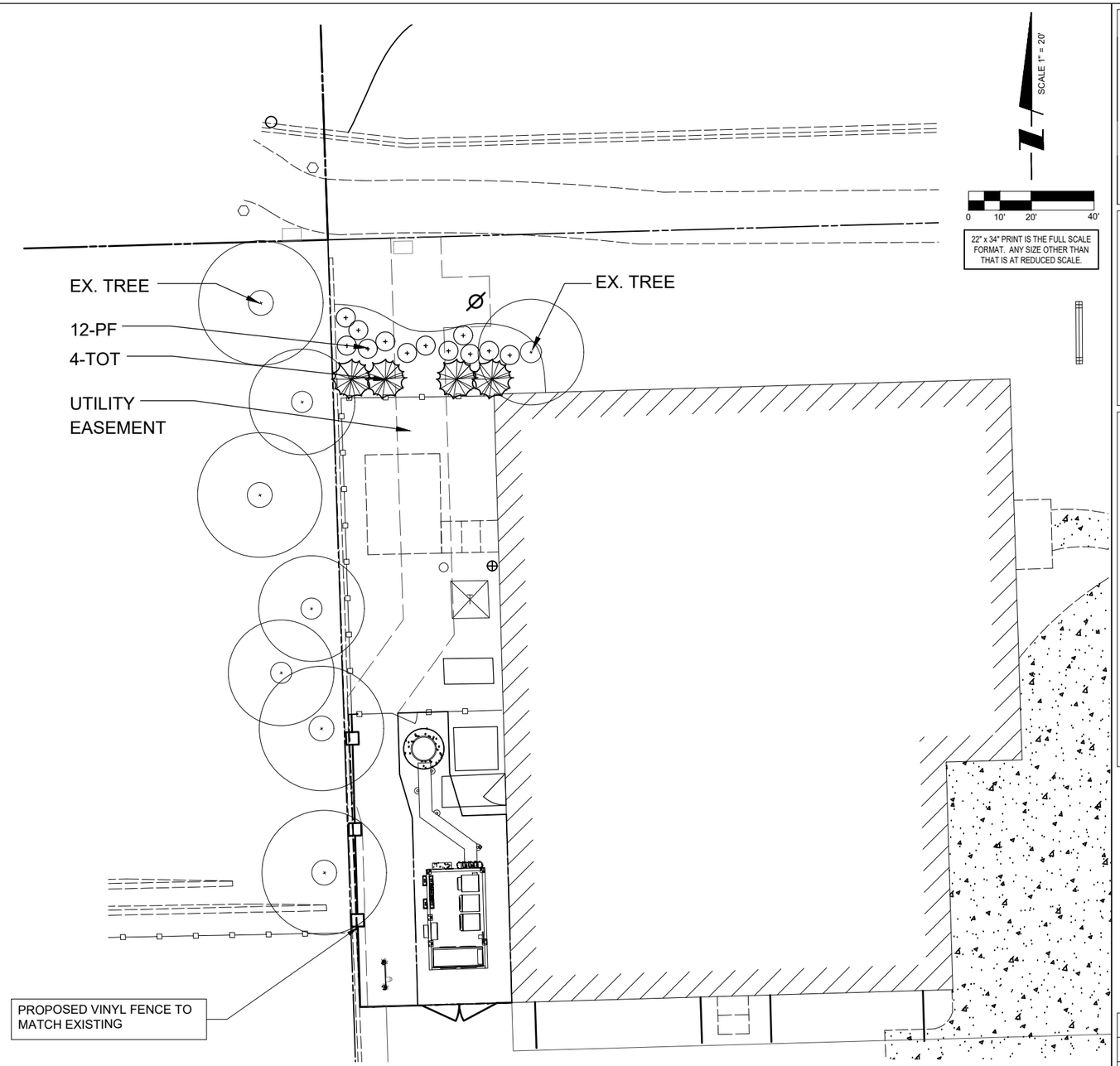

K M TALTY DESIGN
LANDSCAPE ARCHITECTURE
Winnetka, Illinois 60093
847.612.5154 www.kmtaltydesign.com

REGISTERED LANDSCAPE ARCHITECT
KATHRYN MAXWELL TALTY
157-001196
STATE OF ILLINOIS

CHICAGO SMSA
limited partnership
d/b/a VERIZON WIRELESS

TERRA CONSULTING GROUP, LTD.
600 BUSSE HIGHWAY
PARK RIDGE, IL 60068
PH: 847-698-6400
FAX: 847-698-6401

REVISIONS

NO.	DESCRIPTION	DATE	BY
2	UPDATE WITH NEW PLATFORM	10/06/16	TJS
3	FINAL PENDING FIBER	08/21/17	DMS
4	UPDATE WITH NEW ECR	08/31/17	JTM
5	UPDATE WITH NEW LAYOUT	09/08/17	DMS
6	FINALS WITH FIBER	10/20/17	RA
7	ADDITION OF LANDSCAPING PLAN	12/29/17	JTM
8	UPDATED PER GAS ROUTE	01/31/18	DMS

LOC. # 311466

W 151ST
& S 80TH

15100 S 80TH AVE
ORLAND PARK, IL 60462

DRAWN BY:	PP
CHECKED BY:	TAZ
DATE:	07/23/15
PROJECT #:	33-1466

SHEET TITLE
LANDSCAPE PLAN

SHEET NUMBER
L-1

ALTA/NSPS LAND TITLE SURVEY

LEGEND

- Light Post
- Power Pole
- Telephone Pedestal
- Manhole
- Water Valve Vault
- Water Service Valve
- Fire Hydrant
- Electricl Meter
- Gas Meter
- Fence
- Centerline
- Section Line
- Underground Sanitary Line
- Underground Electric Line
- Underground Fiber Optic Line
- Underground Gas Line
- Underground Storm Line
- Underground Water Line
- Underground Communication Line
- Found Section Corner Monument
- Found or Set Monument
- Found or Set Cut Cross
- 59.75' Measured
- (60.00') Record
- DOC. NO. Document Number
- Building
- Asphalt
- Concrete
- PROPOSED
- Lease Site Area
- Access Easement
- Utility Easement
- AGL Above Ground Level
- P.O.C. Point of Commencement
- P.O.B. Point of Beginning

LOCATION MAP

NOT TO SCALE

SURVEY NOTES

EASEMENTS AND SETBACKS SHOWN HEREON ARE BASED UPON THE RECORDED SUBDIVISION PLAT UNLESS NOTED OTHERWISE.

THE SURVEYOR EXPRESSES NO OPINION AS TO THE ACCURACY OF ANY UNDERGROUND UTILITIES WHEN NOT READILY VISIBLE FROM THE SURFACE. IT IS RECOMMENDED THAT THE APPROPRIATE GOVERNMENTAL AGENCY, MUNICIPALITY AND/OR UTILITY COMPANY BE CONTACTED FOR VERIFICATION.

THE PERMANENT PARCEL INDEX NUMBERS FOR THE PROPERTY ENCUMBERED BY THE LEASE SITE AND EASEMENT HEREON ARE 27-14-201-010 & 011.

THE FLOOD INSURANCE RATE MAP SHOWS THAT THE PROPERTY DESCRIBED HEREON IS FALLING WITHIN ZONE "X", ACCORDING TO THE COMMUNITY PANEL NUMBER 170140 0702 J, VILLAGE OF ORLAND PARK, MAP NUMBER 17031C0702J, COOK COUNTY, ILLINOIS AND INCORPORATED AREAS, MAP REVISED AUGUST 19, 2008.
ZONE "X" IS AREA DETERMINED TO BE OUTSIDE THE 0.2% ANNUAL CHANCE FLOODPLAIN.

NO WETLAND MARKERS WERE OBSERVED DURING FIELD SURVEY, DATED 1/10/2018.

EASEMENTS AND SERVITUDES SHOWN HEREON ARE BASED UPON A TITLE COMMITMENT ISSUED BY CHICAGO TITLE INSURANCE COMPANY, AND IDENTIFIED AS ORDER NO.: 1401 008962542 D1, WITH AN EFFECTIVE DATE OF JULY 11, 2017.

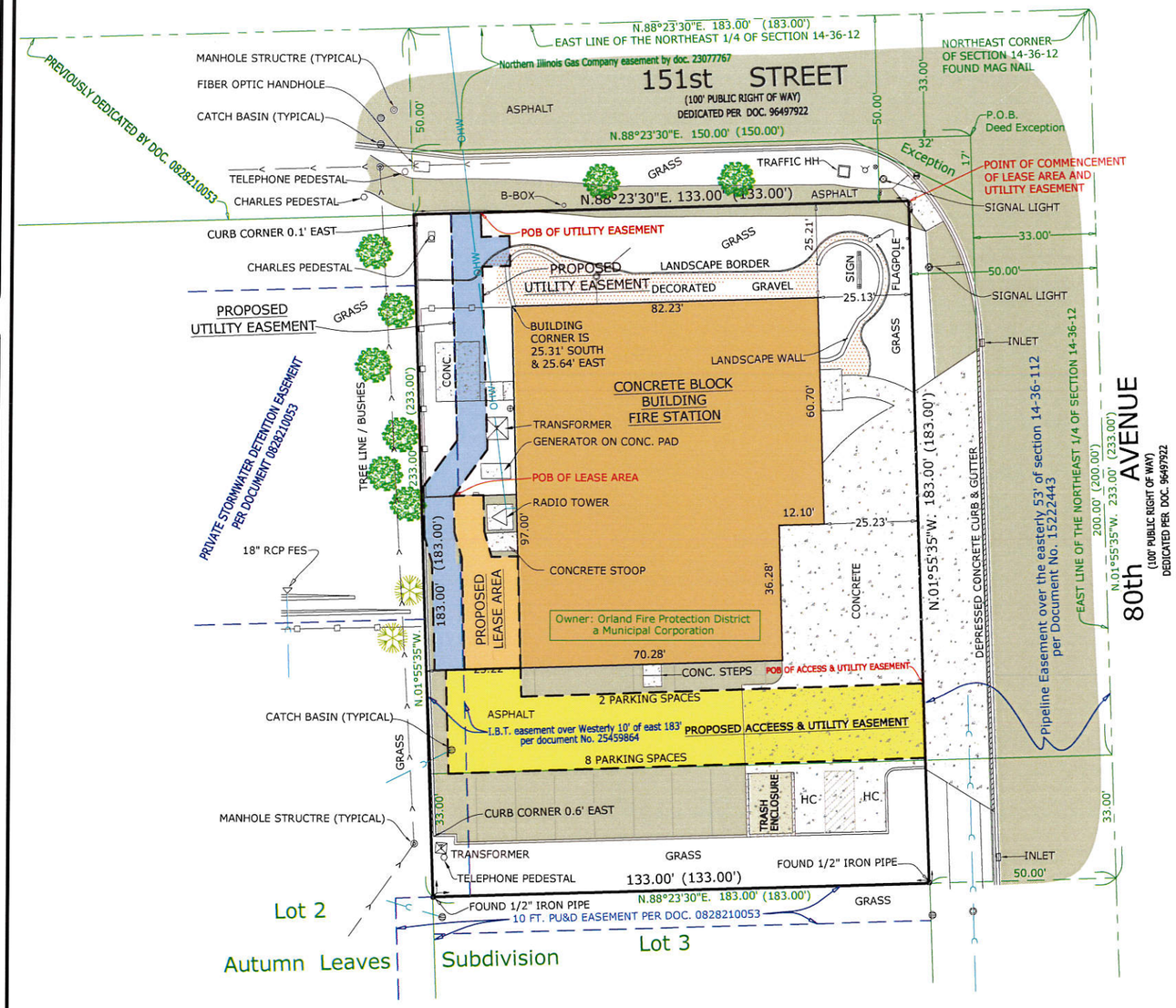

SEE SHEET L-2 (SHEET 2 OF 2) FOR LEASE AREA AND EASEMENTS DETAIL AND LEGAL DESCRIPTIONS

NUMBER OF PARKING STALLS:

REGULAR	10
HANDICAP	2
TOTAL	12

BASIS OF BEARING

BEARINGS SHOWN HEREON ARE BASED ON ILLINOIS STATE PLANE, EAST ZONE, NAD83 (2011)

MEAN MAGNETIC DECLINATION OBTAINED FROM U.S.G.S. 7 1/2 MINUTE SERIES MAP TINLEY PARK QUADRANGLE STATE OF ILLINOIS

LATITUDE: N 41° 36' 58.54"
LONGITUDE: W 087° 48' 53.39"
AT PROPOSED CENTERLINE OF TOWER
COMPLIES WITH F.A.A. 1/A ACCURACY REQUIREMENTS

SCALE : 1" = 40'

O' 20' 40' 80'

11" X 17" PRINT IS THE FULL SCALE FORMAT OF THIS SURVEY. ANY OTHER SIZE IS AT AN ADJUSTED SCALE.

MN GN 1 1/2° 27 MILS 0°32' 9 MILS

UTM GRID AND 1993 MAGNETIC NORTH DECLINATION AT CENTER OF QUAD MAP

PARENT TRACT:

Chicago Title Insurance Company
Order No.: 1401 008962542 D1
Effective date: July 11, 2017
Document Number 25171045, Recorded October 1, 1979)

THE NORTH 233.O FEET OF THE EAST 183.0 FEET OF THE EAST HALF OF THE NORTHEAST QUARTER OF SECTION 14, TOWNSHIP 36 NORTH, RANGE 12, EAST OF THE THIRD PRINCIPAL MERIDIAN (EXCEPT HIGHWAYS), IN COOK COUNTY, ILLINOIS.

SURVEYOR'S CERTIFICATE

STATE OF ILLINOIS
COUNTY OF KANE } S.S.

TO: Chicago SMSA
and Chicago Title Insurance Company

THIS IS TO CERTIFY THAT THIS MAP OR PLAT AND THE SURVEY ON WHICH IT IS BASED, BEING COMPLETED IN THE FIELD ON 1/10/2018, WERE MADE IN ACCORDANCE WITH THE 2016 MINIMUM STANDARD DETAIL REQUIREMENTS FOR ALTA/NSPS LAND TITLE SURVEYS, JOINTLY ESTABLISHED AND ADOPTED BY THE AMERICAN LAND TITLE ASSOCIATION AND THE NATIONAL SOCIETY OF PROFESSIONAL SURVEYORS, AND INCLUDES ITEMS 2, 3, 4, 7(a), 8, 9, 11, 14 AND 18 OF TABLE A THEREOF. PURSUANT TO THE ACCURACY STANDARDS AS ADOPTED BY ALTA/NSPS, AND IN EFFECT ON THE DATE OF THIS CERTIFICATION, UNDERSIGNED FURTHER CERTIFIES THAT PROPER FIELD PROCEDURES, INSTRUMENTATION AND ADEQUATE SURVEY PERSONNEL WERE EMPLOYED IN ORDER TO ACHIEVE RESULTS COMPARABLE TO THOSE OUTLINED IN THE "MINIMUM ANGLE, DISTANCE AND CLOSURE REQUIREMENTS FOR SURVEY MEASUREMENTS WHICH CONTROL LAND BOUNDARIES FOR ALTA/NSPS LAND TITLE SURVEYS."

DATED AT BATAVIA, ILLINOIS ON
THIS 11TH DAY OF JANUARY, A.D., 2018.

CHARLES S. MARSHALL
ILLINOIS PROFESSIONAL LAND SURVEYOR NO. 3377
LICENSE EXPIRES 11/30/2018

CHARLES S. MARSHALL STATE OF ILLINOIS NO. 035-003377 BATAVIA PROFESSIONAL LAND SURVEYOR

NO.	DATE	REVISION
1.	1/10/2018	FIELD SURVEY COMPLETED
2.	1/11/2018	FINAL SURVEY COMPLETED
3.		

ADVANCED SURVEYING & MAPPING — Putting the Pieces Together.... Since 1984

PREPARED BY:

ASM Consultants, Inc.
16 E Wilson St, Batavia IL 60510
Tel (630) 879-0200 Fax (630) 454-3774
advanced@advct.com
Professional Design Firm #184-006014 expires 4/30/2019

PARENT TRACT

PREPARED FOR:

Chicago SMSA
CHICAGO SMSA LIMITED PARTNERSHIP
d/b/a VERIZON WIRELESS
1515 WOODFIELD ROAD, SUITE 1400
SCHAUMBURG, ILLINOIS 60173
PHONE: 847-619-5397 FAX: 847-706-7415

TERRA Consulting Group, LTD.
600 Busse Highway
Park Ridge, IL 60068
(847) 698-6400

SITE DESIGNATION INFORMATION:

W 151st ST & S 80th AVE
Location No.: 278765
Project No.: 20130972076
15100 S 80th AVE
ORLAND PARK, IL 60462

DRAWN BY: PS
CHECKED BY: CSM

PROJECT NO. 720290B

L-1

SHEET 1 OF 2

© COPYRIGHT 2013-2018, ASM CONSULTANTS, INC. ALL RIGHTS RESERVED.

ALTA/NSPS LAND TITLE SURVEY

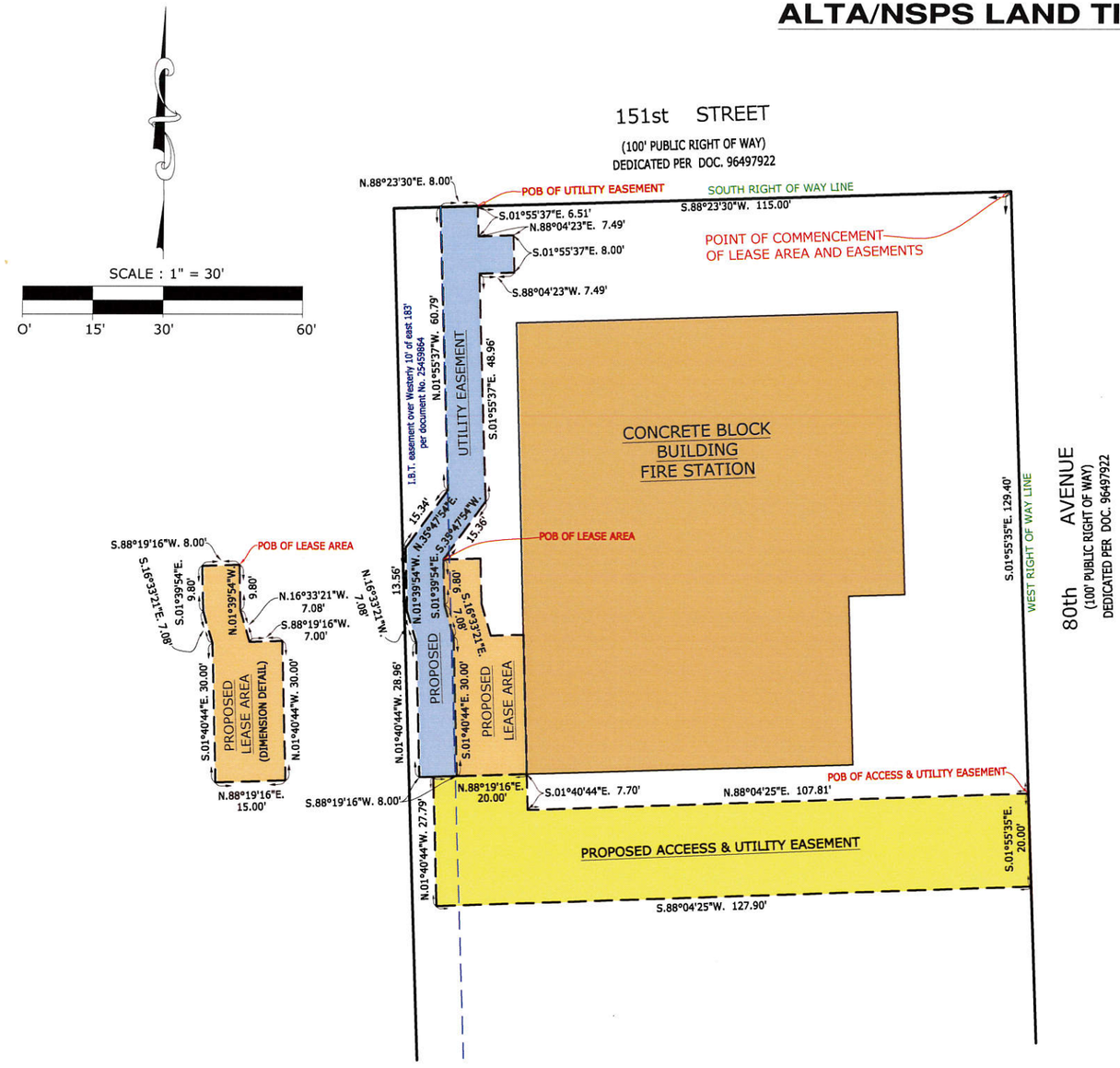

PROPOSED LEASE AREA AND EASEMENTS DIMENSION DETAIL

PROPOSED LEASE AREA LEGAL DESCRIPTION:

A PARCEL OF LAND FOR LEASE AREA PURPOSES, BEING A PART OF THE EAST 1/2 OF THE NORTHEAST 1/4 OF SECTION 14, TOWNSHIP 36 NORTH, RANGE 12, EAST OF THE THIRD PRINCIPAL MERIDIAN, IN COOK COUNTY, ILLINOIS, FURTHER DESCRIBED AS FOLLOWS:

COMMENCING AT THE INTERSECTION OF THE SOUTH LINE OF THE NORTH 50.00 FEET OF SAID NORTHEAST 1/4 WITH THE WEST LINE OF THE EAST 50.00 FEET OF SAID NORTHEAST 1/4, ALSO BEING THE INTERSECTION OF THE SOUTH RIGHT-OF-WAY LINE OF 151ST STREET WITH THE WEST RIGHT-OF-WAY LINE OF 80TH AVENUE; THENCE SOUTH 88 DEGREES 23 MINUTES 30 SECONDS WEST ALONG SAID SOUTH RIGHT-OF-WAY LINE, 115.00 FEET; THENCE SOUTH 01 DEGREES 55 MINUTES 37 SECONDS EAST. 6.51 FEET; THENCE NORTH 88 DEGREES 04 MINUTES 23 SECONDS EAST, 7.49 FEET; THENCE SOUTH 01 DEGREES 55 MINUTES 37 SECONDS EAST, 8.00 FEET; THENCE SOUTH 88 DEGREES 04 MINUTES 23 SECONDS WEST, 7.49 FEET; THENCE SOUTH 01 DEGREES 55 MINUTES 37 SECONDS EAST, 48.96 FEET; THENCE SOUTH 35 DEGREES 47 MINUTES 54 SECONDS WEST, 15.36 FEET FOR A POINT OF BEGINNING; THENCE SOUTH 01 DEGREES 39 MINUTES 54 SECONDS EAST, 9.80 FEET; THENCE SOUTH 16 DEGREES 33 MINUTES 21 SECONDS EAST, 7.08 FEET; THENCE SOUTH 01 DEGREES 40 MINUTES 44 SECONDS EAST, 30.00 FEET; THENCE NORTH 88 DEGREES 19 MINUTES 16 SECONDS EAST, 15.00 FEET; TO THE EXISTING BUILDING; THENCE NORTH 01 DEGREES 40 MINUTES 44 SECONDS WEST, ALONG SAID BUILDING, 30.00 FEET; THENCE SOUTH 88 DEGREES 19 MINUTES 16 SECONDS WEST, 7.00 FEET; THENCE NORTH 16 DEGREES 33 MINUTES 21 SECONDS WEST, 7.08 FEET; THENCE NORTH 01 DEGREES 39 MINUTES 54 SECONDS WEST, 9.80 FEET TO THE POINT OF BEGINNING.

SAID PARCEL CONTAINS 583.1 SQUARE FEET.

PROPOSED UTILITY EASEMENT LEGAL DESCRIPTION:

A PARCEL OF LAND FOR UTILITY EASEMENT PURPOSES, BEING A PART OF THE EAST 1/2 OF THE NORTHEAST 1/4 OF SECTION 14, TOWNSHIP 36 NORTH, RANGE 12, EAST OF THE THIRD PRINCIPAL MERIDIAN, IN COOK COUNTY, ILLINOIS, FURTHER DESCRIBED AS FOLLOWS:

COMMENCING AT THE INTERSECTION OF THE SOUTH LINE OF THE NORTH 50.00 FEET OF SAID NORTHEAST 1/4 WITH THE WEST LINE OF THE EAST 50.00 FEET OF SAID NORTHEAST 1/4, ALSO BEING THE INTERSECTION OF THE SOUTH RIGHT-OF-WAY LINE OF 151ST STREET WITH THE WEST RIGHT-OF-WAY LINE OF 80TH AVENUE; THENCE SOUTH 88 DEGREES 23 MINUTES 30 SECONDS WEST ALONG SAID SOUTH RIGHT-OF-WAY LINE, 115.00 FEET FOR A POINT OF BEGINNING; THENCE SOUTH 01 DEGREES 55 MINUTES 37 SECONDS EAST. 6.51 FEET; THENCE NORTH 88 DEGREES 04 MINUTES 23 SECONDS EAST, 7.49 FEET; THENCE SOUTH 01 DEGREES 55 MINUTES 37 SECONDS EAST, 8.00 FEET; THENCE SOUTH 88 DEGREES 04 MINUTES 23 SECONDS WEST, 7.49 FEET; THENCE SOUTH 01 DEGREES 55 MINUTES 37 SECONDS EAST, 48.96 FEET; THENCE SOUTH 35 DEGREES 47 MINUTES 54 SECONDS WEST, 15.36 FEET; THENCE SOUTH 01 DEGREES 39 MINUTES 54 SECONDS EAST, 9.80 FEET; THENCE SOUTH 16 DEGREES 33 MINUTES 21 SECONDS EAST, 7.08 FEET; THENCE SOUTH 01 DEGREES 40 MINUTES 44 SECONDS EAST, 30.00 FEET; THENCE SOUTH 88 DEGREES 19 MINUTES 16 SECONDS WEST, 8.00 FEET; THENCE NORTH 01 DEGREES 40 MINUTES 44 SECONDS WEST, 28.96 FEET; THENCE NORTH 16 DEGREES 33 MINUTES 21 SECONDS WEST, 7.08 FEET; THENCE NORTH 01 DEGREES 39 MINUTES 54 SECONDS WEST, 13.56 FEET; THENCE NORTH 35 DEGREES 47 MINUTES 54 SECONDS EAST, 15.34 FEET; THENCE NORTH 01 DEGREES 55 MINUTES 37 SECONDS WEST, 60.79 FEET TO THE AFOREMENTIONED SOUTH RIGHT-OF-WAY LINE; THENCE NORTH 88 DEGREES 23 MINUTES 30 SECONDS EAST, ALONG SAID RIGHT OF WAY LINE, 8.00 FEET TO THE POINT OF BEGINNING.

SAID PARCEL CONTAINS 1,065.7 SQUARE FEET.

PROPOSED ACCESS & UTILITY EASEMENT LEGAL DESCRIPTION:

A PARCEL OF LAND FOR ACCESS & UTILITY EASEMENT PURPOSES, BEING A PART OF THE EAST 1/2 OF THE NORTHEAST 1/4 OF SECTION 14, TOWNSHIP 36 NORTH, RANGE 12, EAST OF THE THIRD PRINCIPAL MERIDIAN, IN COOK COUNTY, ILLINOIS, FURTHER DESCRIBED AS FOLLOWS:

COMMENCING AT THE INTERSECTION OF THE SOUTH LINE OF THE NORTH 50.00 FEET OF SAID NORTHEAST 1/4 WITH THE WEST LINE OF THE EAST 50.00 FEET OF SAID NORTHEAST 1/4, ALSO BEING THE INTERSECTION OF THE SOUTH RIGHT-OF-WAY LINE OF 151ST STREET WITH THE WEST RIGHT-OF-WAY LINE OF 80TH AVENUE; THENCE SOUTH 01 DEGREES 55 MINUTES 35 SECONDS EAST ALONG SAID WEST RIGHT-OF-WAY LINE, 129.40 FEET FOR THE POINT OF BEGINNING; THENCE CONTINUING SOUTH 01 DEGREES 55 MINUTES 35 SECONDS EAST, 20.00 FEET; THENCE SOUTH 88 DEGREES 04 MINUTES 25 SECONDS WEST, 127.90 FEET; THENCE NORTH 01 DEGREES 40 MINUTES 44 SECONDS WEST, 27.79 FEET; THENCE NORTH 88 DEGREES 19 MINUTES 16 SECONDS EAST, 20.00 FEET; THENCE SOUTH 01 DEGREES 40 MINUTES 44 SECONDS EAST, 7.70 FEET; THENCE NORTH 88 DEGREES 04 MINUTES 25 SECONDS EAST, 107.81 FEET TO THE POINT OF BEGINNING.

SAID PARCEL CONTAINS 2,712.1 SQUARE FEET.

ADVANCED SURVEYING & MAPPING
Putting the Pieces Together....
Since 1984

PREPARED BY:
ASM
ASM Consultants, Inc.
16 E Wilson St, Batavia IL 60510
Tel (630) 879-0200 Fax (630) 454-3774
advanced@advct.com
Professional Design Firm #184-006014 expires 4/30/2019

LEASE AREA & EASEMENTS DETAIL

PREPARED FOR:

Chicago SMSA
CHICAGO SMSA LIMITED PARTNERSHIP
d/b/a VERIZON WIRELESS
1515 WOODFIELD ROAD, SUITE 1400
SCHAUMBURG, ILLINOIS 60173
PHONE: 847-619-5397 FAX: 847-706-7415

TERRA
Consulting Group, LTD.
600 Busse Highway
Park Ridge, IL 60068
(847) 698-6400

NO.	DATE	REVISION
1.	1/10/2018	FIELD SURVEY COMPLETED
2.	1/11/2018	FINAL SURVEY COMPLETED

SITE DESIGNATION INFORMATION:

W 151st ST & S 80th AVE
Location No.: 278765
Project No.: 20130972076
15100 S 80th AVE
ORLAND PARK, IL 60462

DRAWN BY: PS
CHECKED BY: SLF

PROJECT NO. 720290B

L-2

© COPYRIGHT 2013-2018, ASM CONSULTANTS, INC. ALL RIGHTS RESERVED.