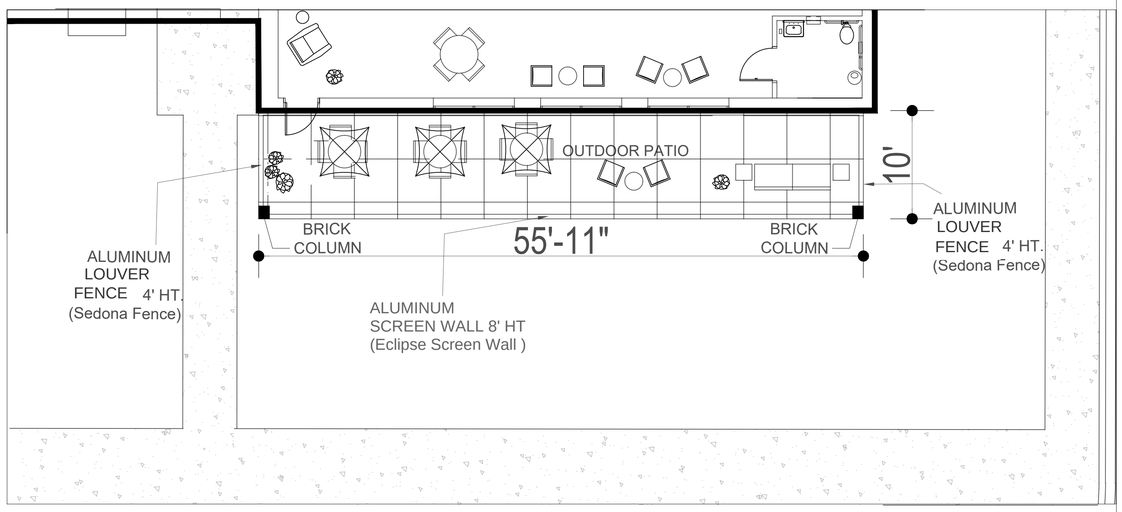

1 OUTDOOR PATIO PLAN

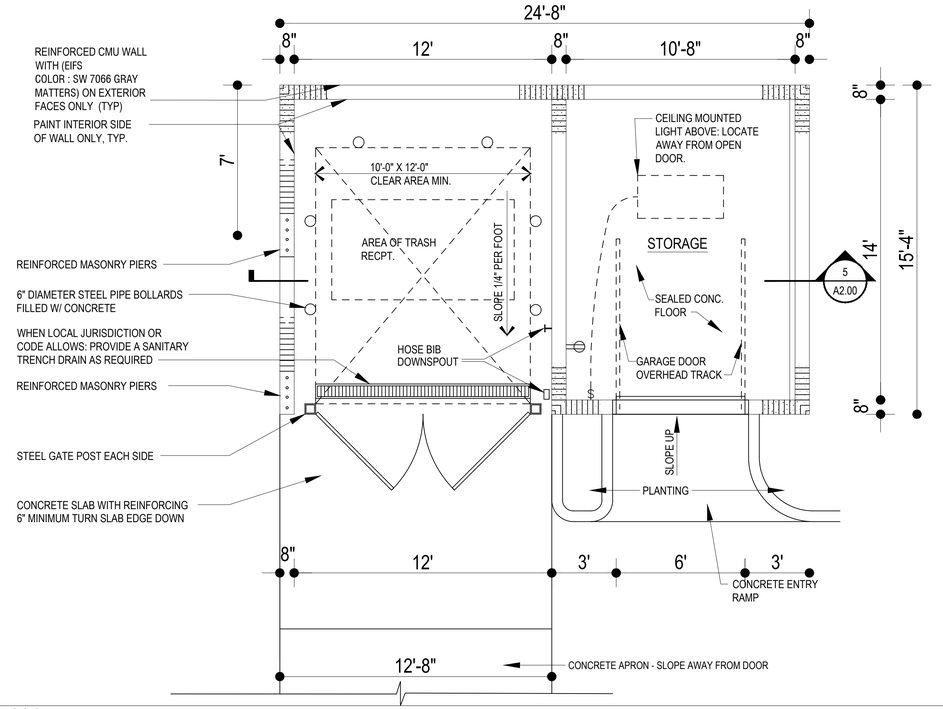

3 PLAN

SCALE: 1"=40'-0"

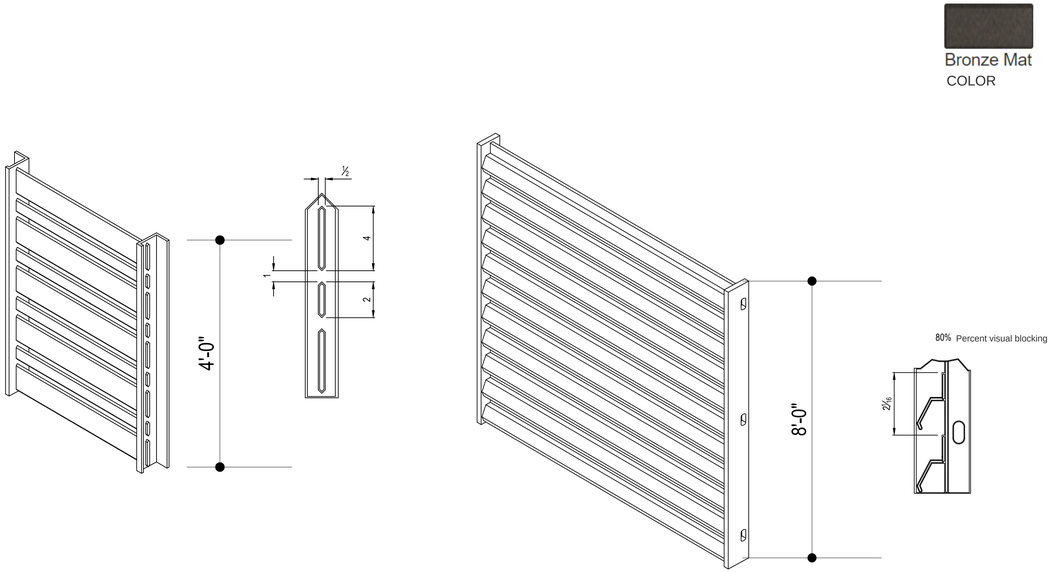

ALUMINUM LOUVER
SEDONA FENCE 4FT HT

VERTICAL POSITION

Sedona Aluminum Fencing is provided with two widths of blades which are installed either vertically or horizontally in an alternating pattern. Opening between blades can range from 1 to 4 inches (25 to 102 mm).

ALUMINUM SCREEN
WALL ECLIPSE 8FT HT

VERTICAL POSITION

Louver panels can be installed with the louvers in either a vertical or a horizontal position.
Eclipse Screen Wall Ornamental fencing system consisting of [vertical] [horizontal], fixed louver, modular fence panels fabricated with extruded aluminum framing bars and supported by extruded aluminum fence posts; Eclipse Fencing as manufactured by Ametco Manufacturing Corporation.

2 OUTDOOR PATIO FENCE AND SCREEN WALL DETAIL

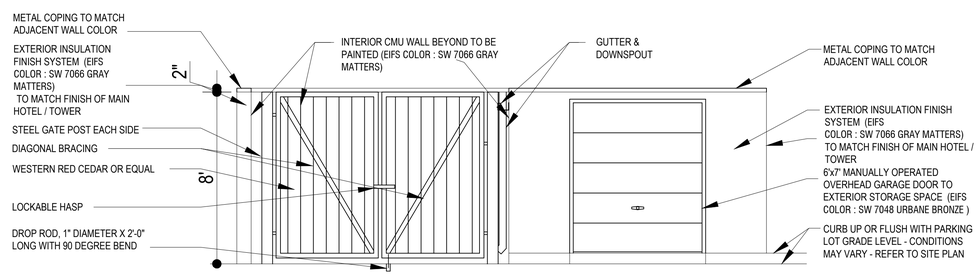

4 ELEVATION- EXTERIOR REFUSE RECEPTACLE / STORAGE

SCALE: 1"=40'-0"

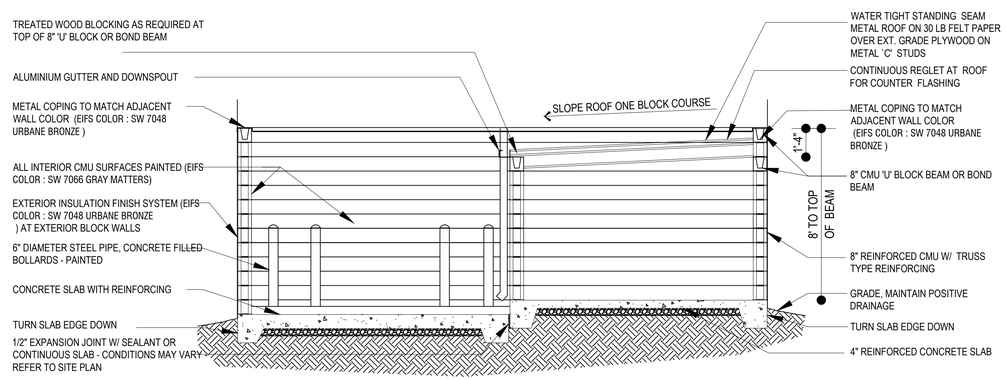

5 SECTION- EXTERIOR REFUSE RECEPTACLE / STORAGE

SCALE: 1"=40'-0"

BASE4

BASE4
2901 CLINT MOORE ROAD #114
BOCA RATON, FLORIDA 33496
www.base-4.com

Seal

Owner:

Hawkeyehotels

HAWKEYE HOTELS
2706 James Street
Coralville,IA 52241
www.hawkeyehotels.com

Hampton Inn

HAMPTON INN
ORLAND PARK, IL

No.	ISSUE DATE	PROJECT STATUS

DATE	2019.01.10
DRAWN BY	SBB
CHECKED BY	
SCALE	AS NOTED
PROJECT NO.	
SHEET NAME	DUMPSTER & SCREEN DETAIL
DRAWING NO.	A1.2

ROOF DRAIN SCHEDULE

LOCATION : ILLINOIS,ORLAND PARK
PRIMARY RAINFALL RATE : 3.5 IN / HR
SLOPE OF DRAIN PIPING : 1/8" PER FOOT

ZONE NO.	ROOF AREA (SQ.FT.)	PRIMARY DRAIN SIZE	SECONDARY ROOF DRAIN
1	2959	4"	4"
2	2980	4"	4"
3	3055	4"	4"
4	2598	4"	4"
5	2649	4"	4"
6	2649	4"	4"

ROOF DRAINAGE SYSTEMS WERE SIZED PER THE IPC 2015.

STORM DRAIN PIPE SIZING TABLE, 1106.2

DIAMETER OF LEADER	HORIZONTALLY PROJECTED ROOF AREA (Square feet) RAINFALL RATE (INCHES PER HOUR) PRIMARY ROOF (SQ.FT.)	OVERFLOW ROOF AREA (SQ.FT.)
3"	1510	1510
4"	3159	3159
6"	9450	9450
8"	19615	19615

DIAMETER OF LEADER	VERTICAL PROJECTED ROOF AREA (SQUARE FEET) RAINFALL RATE (INCHES PER HOUR) PRIMARY ROOF (SQ.FT.)	OVERFLOW ROOF AREA (SQ.FT.)
3"	2390	2390
4"	4545	4545
6"	14780	14780
8"	30686	30686

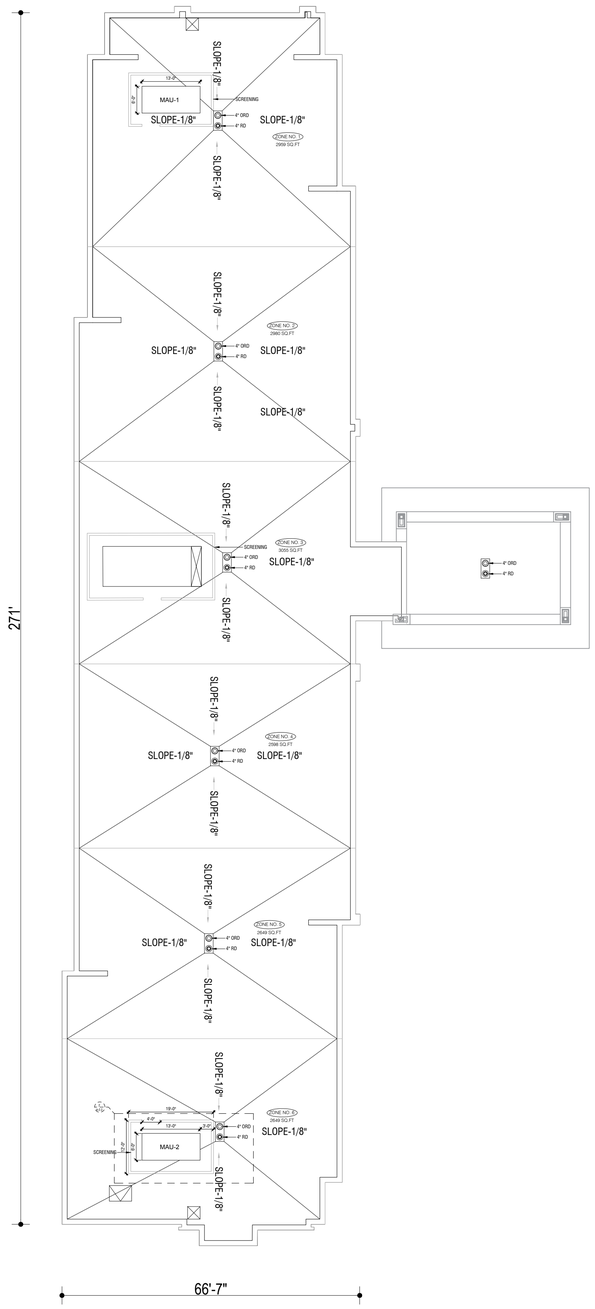

1 ROOF PLAN PLAN
SCALE: 1/16"=1'-0"

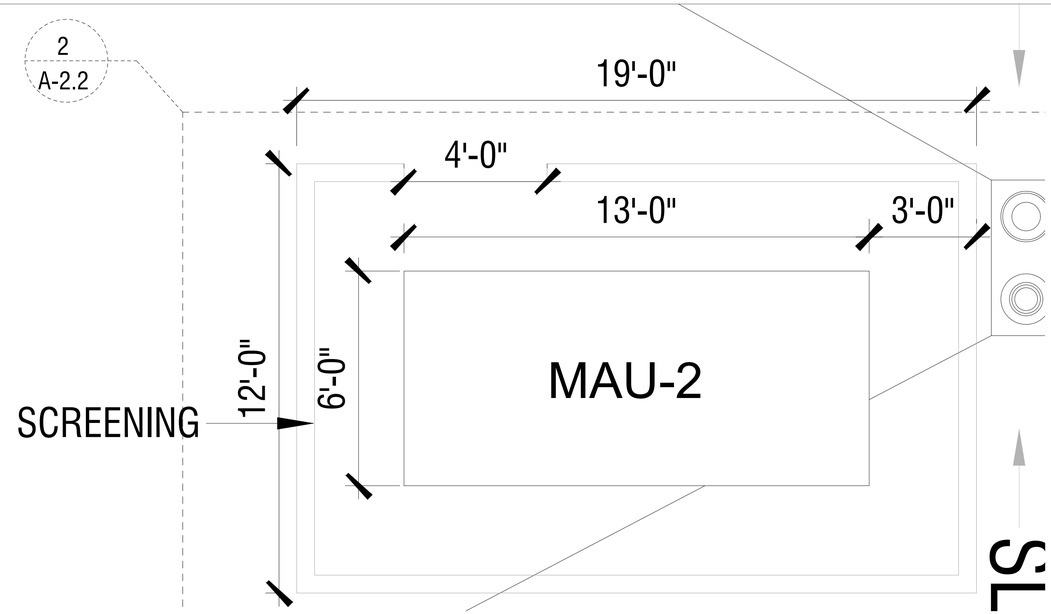

3 SCREENING PLAN
SCALE: 1/2"=1'-0"

2 SCREENING ELEVATIONS
SCALE: 1/2"=1'-0"

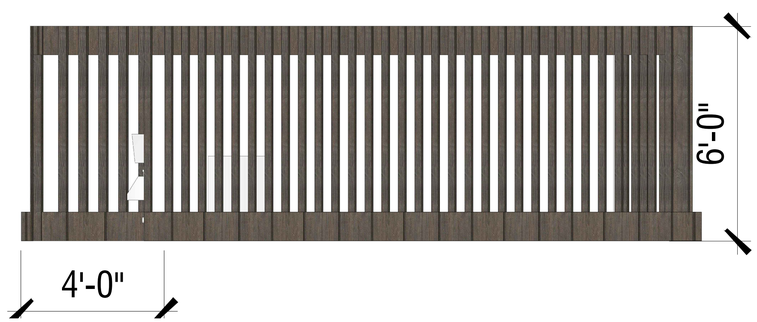

1 SCREENING ELEVATIONS
SCALE: 1/2"=1'-0"

BASE4
2901 CLINT MOORE ROAD #114
BOCA RATON, FLORIDA 33496
www.base-4.com

Seal

Owner:

HAWKEYE HOTELS
2706 James Street
Coralville, IA 52241
www.hawkeyehotels.com

HAMPTON INN
ORLANDO PARK, IL

No.	ISSUE DATE	PROJECT STATUS

DATE	2019.01.10
DRAWN BY	NB
CHECKED BY	SB
SCALE	AS NOTED
PROJECT NO.	

SHEET NAME
ROOF PLAN & SCREENING DETAIL

DRAWING NO.
A2.2

1 NORTH ELEVATION (RIGHT)

SCALE: 3/32"=1'-0"

NORTH FACADE MATERIALS		
North Elevation	SF	%
COUNTRY LEDGESTONE ASHFALL	1720.79	39%
EF763_VINTAGE WOOD BARK	573.81758	13%
GLEN GREY BLACK FOREST	1115.49	26%
GLEN GREY CEDAR CREEK	949.13101	22%
TOTAL	4359.22859	100%

EAST FACADE MATERIALS		
East Elevation	SF	%
COUNTRY LEDGESTONE ASHFALL	1992.75	16%
EF763_VINTAGE WOOD BARK	2344.75	19%
GLEN GREY BLACK FOREST	4155.11	34%
GLEN GREY CEDAR CREEK	3909.59	32%
TOTAL	12402.2	100%

LEGEND-EXTERIOR FINISHES

CODE	MTL-TYPE	COLOR	MATERIAL NAME
01	STONE		COUNTRY LEDGESTONE ASHFALL
02	WOOD SIDING		EF763_VINTAGE WOOD BARK
03	BRICK		GLEN GERY BLACK FOREST
04	BRICK		GLEN GERY CEDAR CREEK

GLAZING & AWNINGS PERCENTAGE ON FIRST FLOOR

Sr. No.	Elevation	Facade Length (in feet)	Glazed length (in feet)	Awnings length (in feet)	Total glazed and awning length	%
1	East	278	115	55	170	61%
2	West	278	104	63	167	60%
TOTAL		**556**	**219**	**118**	**337**	61%

NOTE: THERE IS NO PERCENTAGE FOR ARCADES ON THE PROJECT.

RECESSES & PROJECTIONS PERCENTAGE ON FIRST FLOOR

Sr. No.	Elevation	Facade Length (in feet)	Recessed length (in feet)	Projection length (in feet)	Total recessed and projections length (in feet)	%
1	East	278	10	157	167	60%
2	West	278	107	34	141	51%
TOTAL		**556**	**117**	**191**	**308**	55%

NOTE: THERE IS NO PERCENTAGE FOR ARCADES ON THE PROJECT.

2 EAST ELEVATION (FRONT)

SCALE: 3/32"=1'-0"

BASE4
2901 CLINT MOORE ROAD #114
BOCA RATON, FLORIDA 33496
www.base-4.com

Seal

Owner:

HAWKEYE HOTELS
2706 James Street
Coralville, IA 52241
www.hawkeyehotels.com

HAMPTON INN
ORLANDO PARK, IL

No.	ISSUE DATE	PROJECT STATUS

DATE	2019.01.10
DRAWN BY	NB
CHECKED BY	SB
SCALE	AS NOTED
PROJECT NO.	
SHEET NAME	

ELEVATIONS

DRAWING NO.

A3.1

WEST FACADE MATERIALS		
West Elevation	SF	%
COUNTRY LEDGESTONE ASHFALL	4297.5	30%
EF763_VINTAGE WOOD BARK	1896	13%
GLEN GREY BLACK FOREST	4217.2532	30%
GLEN GREY CEDAR CREEK	3767	27%
TOTAL	14177.7532	100%

SOUTH FACADE MATERIALS		
South Elevation	SF	%
COUNTRY LEDGESTONE ASHFALL	1755.71766	40%
EF763_VINTAGE WOOD BARK	483.89	11%
GLEN GREY BLACK FOREST	1228.99	28%
GLEN GREY CEDAR CREEK	934.3	21%
TOTAL	4402.89766	100%

LEGEND-EXTERIOR FINISHES

CODE	MTL-TYPE	COLOR	MATERIAL NAME
01	STONE		COUNTRY LEDGESTONE ASHFALL
02	WOOD SIDING		EF763_VINTAGE WOOD BARK
03	BRICK		GLEN GERY BLACK FOREST
04	BRICK		GLEN GERY CEDAR CREEK

GLAZING & AWNINGS PERCENTAGE ON FIRST FLOOR

Sr. No.	Elevation	Facade Length (in feet)	Glazed length (in feet)	Awnings length (in feet)	Total glazed and awning length	%
1	East	278	115	55	170	61%
2	West	278	104	63	167	60%
TOTAL		**556**	**219**	**118**	**337**	61%

NOTE: THERE IS NO PERCENTAGE FOR ARCADES ON THE PROJECT.

RECESSES & PROJECTIONS PERCENTAGE ON FIRST FLOOR

Sr. No.	Elevation	Facade Length (in feet)	Recessed length (in feet)	Projection length (in feet)	Total recessed and projections length (in feet)	%
1	East	278	10	157	167	60%
2	West	278	107	34	141	51%
TOTAL		**556**	**117**	**191**	**308**	55%

NOTE: THERE IS NO PERCENTAGE FOR ARCADES ON THE PROJECT.

3 SOUTH ELEVATION (LEFT)

SCALE: 3/32"=1'-0"

4 WEST ELEVATION (REAR)

SCALE: 3/32"=1'-0"

BASE4
2901 CLINT MOORE ROAD #114
BOCA RATON, FLORIDA 33496
www.base-4.com

Seal

Owner:

HAWKEYE HOTELS
2706 James Street
Coralville, IA 52241
www.hawkeyehotels.com

HAMPTON INN
ORLANDO PARK, IL

No.	ISSUE DATE	PROJECT STATUS

DATE	2019.01.10
DRAWN BY	NB
CHECKED BY	SB
SCALE	AS NOTED
PROJECT NO.	
SHEET NAME	

ELEVATIONS

DRAWING NO.

A3.2

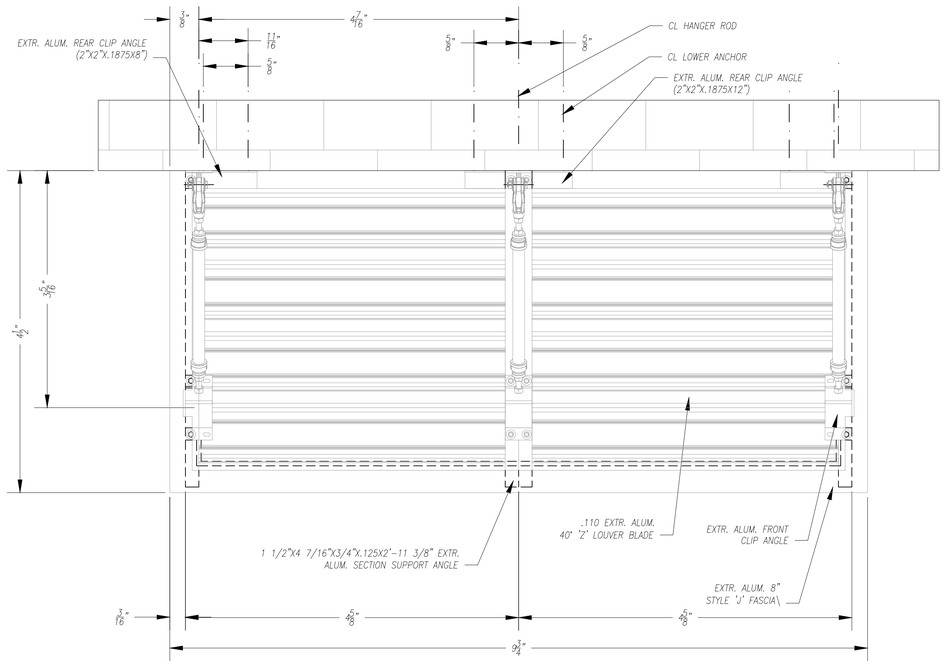

1 AWNING PLAN

SCALE: 12"=1'-0"

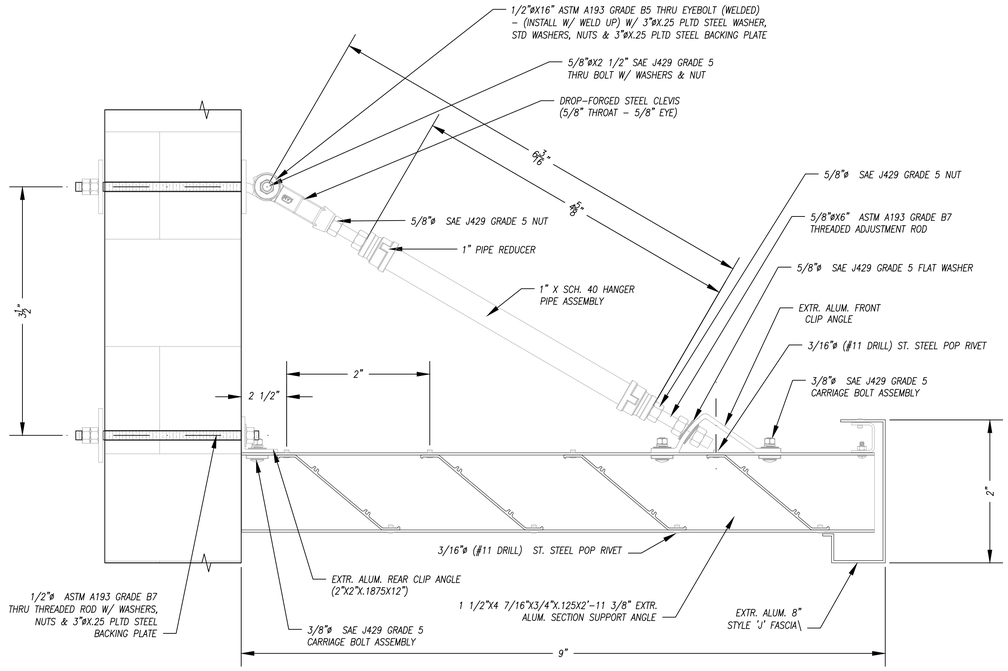

2 SECTION AT MID-CANOPY

SCALE: 12"=1'-0"

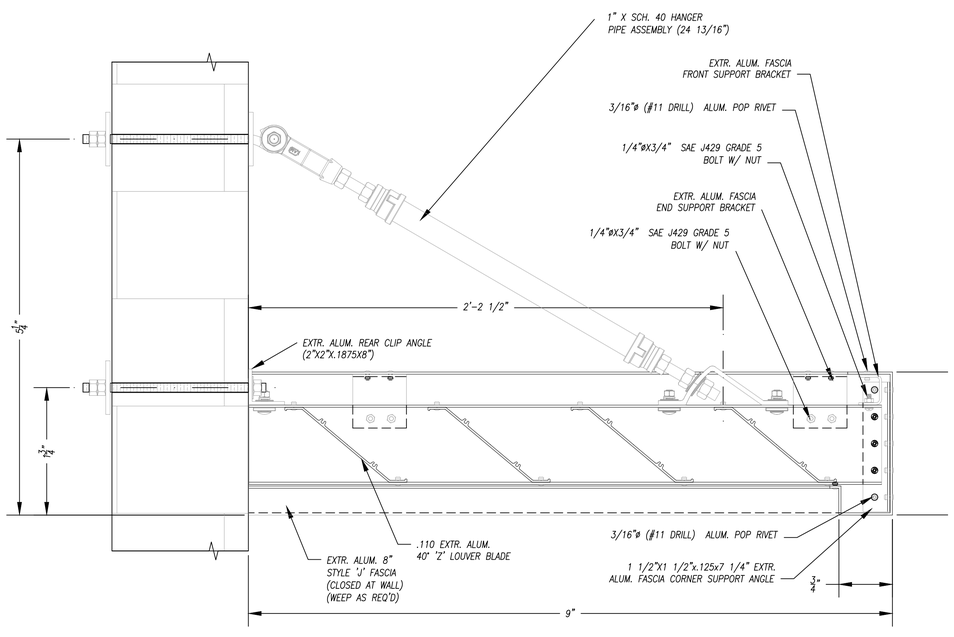

3 SECTION AT CANOPY END

SCALE: 12"=1'-0"

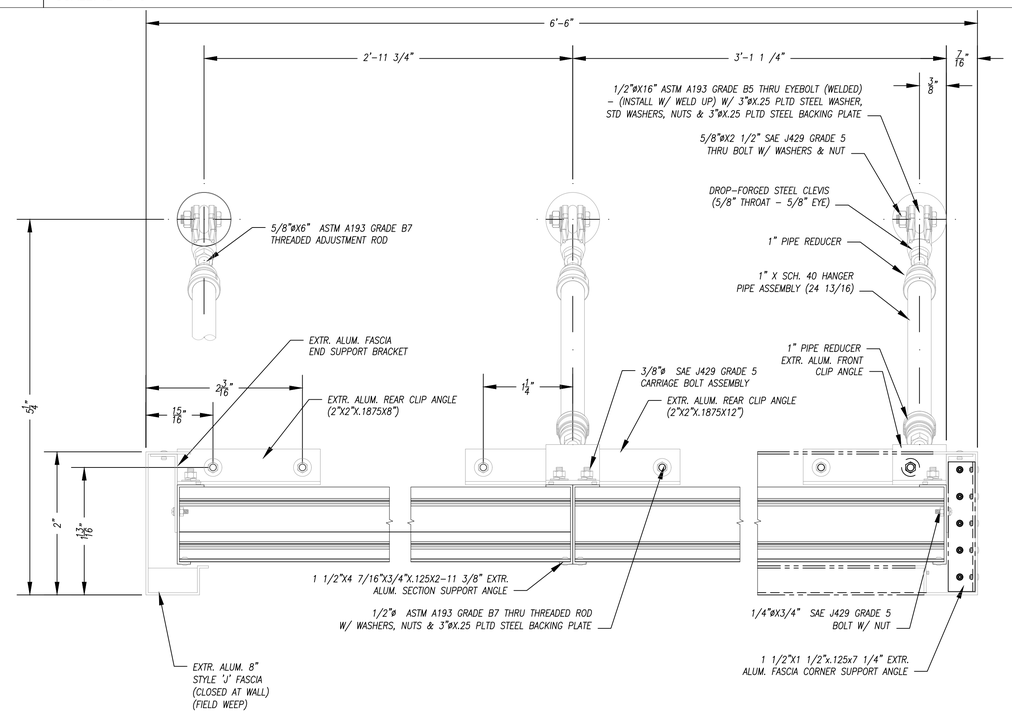

4 SECTION AT CANOPY END

SCALE: 12"=1'-0"

BASE4

BASE4
2901 CLINT MOORE ROAD #114
BOCA RATON, FLORIDA 33496
www.base-4.com

Seal

Owner:

Hawkeyehotels
HAWKEYE HOTELS
2706 James Street
Coralville,IA 52241
www.hawkeyehotels.com

Hampton Inn

HAMPTON INN
ORLAND PARK, IL

No.	ISSUE DATE	PROJECT STATUS

DATE	2019.01.10
DRAWN BY	SBB
CHECKED BY	
SCALE	AS NOTED
PROJECT NO.	
SHEET NAME	AWNING DETAILS
DRAWING NO.	A4.1